Bulletin Of High Technology N 4 (40) 2026.-pp.56-61.

UDC: 004.031.42:616.8-009.7

COMPARATIVE ANALYSIS AND IMPLEMENTATION OF EXISTING EMG-CONTROLLED INTERFACE UNITS FOR AUXILIARY DEVICES DESIGNED FOR INDIVIDUALS WITH UPPER-LIMB IMPAIRMENTS

Mane V. Mkrtchyan
National University of Architecture and Construction of Armenia
105 Teryan st., 0009, Yerevan
e-mail: mmkrtchyan@nuaca.am
ORCID: 0009-0000-1836-7140
Republic of Armenia

Azat L. Smbatyan
National University of Architecture and Construction of Armenia
105 Teryan st., 0009, Yerevan
e-mail: azatsmbatyan@gmail.com
ORCID: 0009-0008-9729-419
Republic of Armenia

https://doi.org/10.56243/18294898-2026.4-56

Abstract

This paper presents the challenges and research related to the development of a control unit for an assistive device designed for individuals with upper limb impairments. A comparative analysis of existing technological platforms, including soft robotic gloves, exoskeleton systems, and functional electrical stimulation (FES) devices, is provided. Their technological limitations and potential optimization approaches are discussed in terms of accessibility, response time, and personalization.

A solution based on the processing of electromyographic (EMG) signals using the ESP32 microcontroller is proposed. The advantages of the proposed system are justified in terms of accuracy, compactness, and low cost. The system processes EMG signals captured from muscle activity, amplifies and filters them using an AD8226 instrumentation amplifier, and performs signal processing through the ESP32 microcontroller. Control commands are generated using PWM signals to drive servo motors.

The results of experimental testing and mathematical modeling demonstrate the reliability and effectiveness of the proposed control system. The developed approach provides a practical and cost-effective solution for rehabilitation technologies and assistive devices for individuals with upper limb motor impairments.

Keywords: EMG signal, ESP32, AD8226, assistive device, upper limbs, PWM control, mathematical modeling, robotic glove, paralysis.

Introduction

The development of assistive devices for people with upper limb impairments is one of the most relevant areas of biomedical engineering.

Bulletin Of High Technology N 4 (40) 2026.-pp.56-61.
M.V. Mkrtchyan, A.L. Smbatyan
COMPARATIVE ANALYSIS AND IMPLEMENTATION OF EXISTING EMG-CONTROLLED INTERFACE UNITS FOR AUXILIARY DEVICES DESIGNED FOR INDIVIDUALS WITH UPPER-LIMB IMPAIRMENTS THEOREM

This work is devoted to the development of a control unit for an assistive device intended for individuals with upper limb impairments and controlled on the basis of EMG signals. Existing technological platforms have certain drawbacks that complicate the formalization of control. The choice of the solution method was made taking into account the limitations of existing technological platforms. The study addresses the following questions: which methods of EMG signal processing and classification make it possible to improve the accuracy and reliability of recognizing control commands, and which technical solutions ensure effective interaction between the biosignal acquisition system and the actuator. As a result of the analysis, it was decided to use biosignal (EMG) processing in combination with a microcontroller-based control system. Methods for optimizing existing solutions and the extent of their applicability are considered. The results of the conducted experiments are also presented, and the corresponding conclusions are formulated.

Analysis of Existing Systems



There are various solutions for assistive devices for people with upper limb impairments. Modern solutions can be conditionally divided into three main categories.

Fig. 1 – Exoskeleton device

Exoskeleton systems provide high precision and control of movements through rigid mechanical structures and actuators [1, 4]. An example is shown in Fig. 1.

Fig. 2 – Soft robotic glove

Soft robotic gloves - are based on flexible materials and pneumatic or cable-driven mechanisms [2]. An example is shown in Fig. 2.



Functional electrical stimulation (FES) - systems activate muscles by means of electrical impulses [3, 6]. An example is shown in Fig. 3.



Fig. 3 – Electrical stimulation device

The results of the comparative analysis of these solutions are presented in Tab. 1. The comparison takes into account the following main characteristics: As can be seen from Table 1, the most suitable option is a control system based on EMG signal processing.

Table 1

Characteristics of the solutions

Criteria	Soft Robotic Gloves	Exoskeletons	Functional Electrical Stimulation (FES) Devices
Purpose	Assistance in restoring mobility and home-based rehabilitation	Precise control of movements and active rehabilitation	Stimulation of muscle activity and neuromuscular control
Technology	Pneumatic or cable-driven activation mechanism	Rigid mechanical skeletal structure with motors and sensors	Electrical impulses for muscle stimulation
Advantages	Lightweight, mobile, safe	Precise movements, strong activation	Restoration of natural muscle activity
Disadvantages	Limited force and precision	Heavy structure, complex control	Dependence on precise electrode placement and skin condition
Areas of application	Home rehabilitation, mobility assistance	Medical rehabilitation centers	Treatment of neurological disorders by means of external stimulation
Cost	Medium (relatively affordable)	High	Medium (relatively affordable)
Examples	Soft Robotic Glove (Harvard Biodesign Lab)	Hand Exoskeleton (CyberGlove Systems)	Bioness H200 Wireless

Proposed Solution

A control system based on EMG signal processing is proposed. Fig. 4 shows the complete diagram of the system, which uses EMG sensors that record the user's muscle activity. The resulting analog signal is amplified and filtered using the AD8226 instrumentation amplifier [5] and is then fed to the ESP32 microcontroller [8], where analog-to-digital conversion (ADC [9]) is performed. Next, a threshold-based signal processing algorithm is applied, on the basis of which control commands for the servo drives are generated. Control is carried out by means of PWM signals, which ensures precise and stable control of movements.

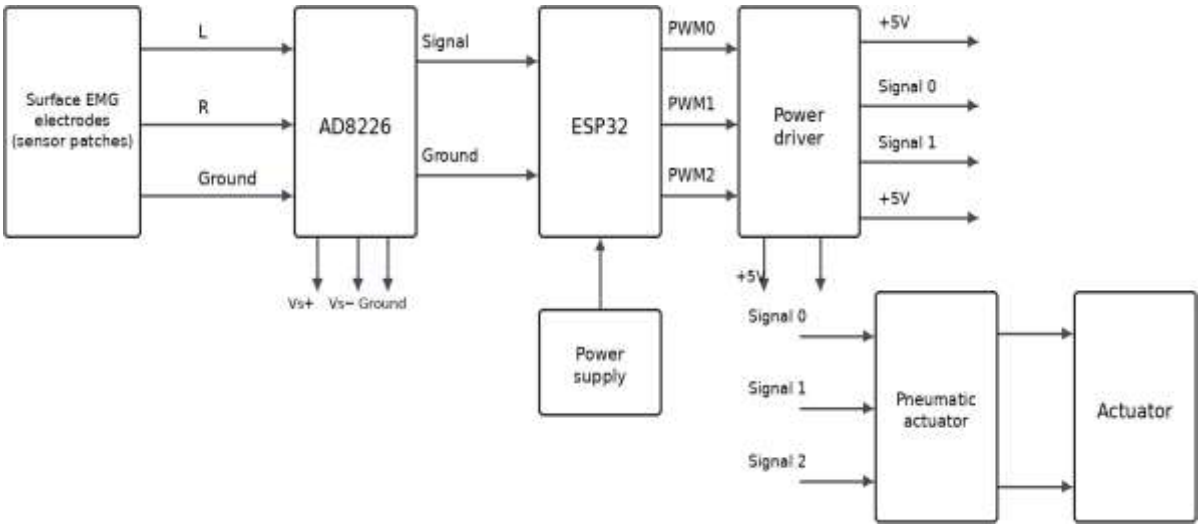

Fig. 4. Diagram of the EMG signal control unit

Advantages of the System

The main advantages of the proposed system are: Low cost of components (ESP32 [8]; AD8226 [5]); Compact design. High response speed; Possibility of individual adjustment of threshold parameters; Possibility of further system expansion thanks to the built-in Wi-Fi and Bluetooth interfaces.

Experimental Studies

To evaluate the performance of the system, experimental studies of EMG signal acquisition were carried out. The sensors were placed on the user's forearm muscles. The signal was amplified using the AD8226 [5] and fed to the ESP32 [8] for further processing. During the experiments, changes in the amplitude of the EMG signal were analyzed at different levels of muscle tension. When a predefined threshold value was exceeded, the system activated the servo drives, performing the "open" or "close" action.

Mathematical Modeling

To analyze the behavior of the signal, a model represented in the following form was used: $EMG(t) = A \cdot \sin(\omega t) + n(t)$, where: A is the signal amplitude, ω is the angular frequency, n(t) is the noise component.

The modeling made it possible to select optimal threshold values for the gain and to reduce the probability of false activations of the system.

Conclusion

In this work, a control unit for an assistive device for individuals with upper limb impairments, based on EMG signal processing, was developed and studied. The comparative analysis showed that the proposed solution provides an optimal combination of accuracy, cost, and design simplicity. The results of the experimental tests confirmed the operability and practical applicability of the developed system. The proposed model can serve as a basis for further research and improvements, as well as for implementation in rehabilitation technologies.

References

1. Polygerinos, P., Wang, Z., Galloway, K. C., et al. (2015). "Soft robotic glove for hand rehabilitation and assistance." *IEEE Transactions on Neural Systems and Rehabilitation Engineering, 23*(6), 917–926.
2. Dollar, A. M., & Herr, H. (2008). "Lower extremity exoskeletons and active orthoses: Challenges and state-of-the-art." *IEEE Transactions on Robotics, 24*(1), 144–158.
3. Peckham, P. H., & Knutson, J. S. (2005). "Functional electrical stimulation for neuromuscular applications." *Annual Review of Biomedical Engineering, 7*, 327–360.
4. Harvard Biodesign Lab. (2017). "The Soft Robotic Glove: Enabling Hand Rehabilitation and Assistance." *Harvard University Research Report.* Retrieved from
5. Fraden M. E. *Handbook of Modern Sensors: Physics, Designs, and Applications.*
6. Kesar, T. M., Perumal, R., & Jancosko, A. (2010). "Functional electrical stimulation of ankle plantarflexor and dorsiflexor muscles: Effects on poststroke gait."
7. *Huigen, E., Peper, A., & Grimbergen, C. A. (2002). "Investigation into the origin of the*

Bulletin Of High Technology N 4 (40) 2026.-pp.56-61.

noise of surface electrodes." Medical and Biological Engineering and Computing, 40(3), 332–338.
8. *Espressif Systems. (2023). ESP32 Technical Reference Manual.*
9. Kester, W. (Ed.). Data Conversion Handbook. Newnes, Elsevier, 2005.
10. Muhammad H. Rashid — *Power Electronics: Circuits, Devices, and Applications*

ՎԵՐԻՆ ՎԵՐՋՈՒՅԹՆԵՐԻ ԽՆԴԻՐՆԵՐ ՈՒՆԵՑՈՂ ԱՆՀԱՏՆԵՐԻ ՀԱՄԱՐ ԷՄԳ ԱԶԴԱՆՇԱՆՆԵՐՈՎ ԿԱՌԱՎԱՐՎՈՂ ՕԺԱՆԴԱԿ ՍԱՐՔԵՐԻ ԱՌԿԱ ԿԱՌԱՎԱՐՄԱՆ ՄԻԱՎՈՐՆԵՐԻ ՀԱՄԵՄԱՏԱԿԱՆ ՎԵՐԼՈՒԾՈՒԹՅՈՒՆ և ԴՐԱ ԻՐԱԿԱՆԱՑՈՒՄԸ

Մ. Վ. Մկրտչյան, **Ա. Լ. Սմբատյան**
Ճարտարապետության և շինարարության Հայաստանի ազգային համալսարան

Քննարկում է օժանդակ սարքի կառավարման միավորի մշակման մարտահրավերները, որը նախատեսված է վերին վերջույթների ֆունկցիան վերականգնելու համար հարակից հաշմանդամություն ունեցող անձանց մոտ: Ներկայացվում է առկա տեխնոլոգիական հարթակների համեմատական վերլուծություն, ներառյալ փափուկ ռոբոտիկ ձեռնոցները, էկզոկմախքային համակարգերը և ֆունկցիոնալ էլեկտրական խթանման (FES) սարքերը: Քննարկվում են դրանց տեխնոլոգիական սահմանափակումները և օպտիմալացման հնարավորությունները՝ մատչելիության, արձագանքման արագության և հարմարեցման առումով: Առաջարկվում է լուծում, որը հիմնված է ESP32 միկրոկառավարիչի միջոցով EMG ազդանշանի (electromyography) մշակման վրա: Հիմնավորվում են առաջարկվող համակարգի առավելությունները՝ ճշգրտության, կոմպակտության և ցածր գնի առումով: Ներկայացվում են իրական փորձերի և մաթեմատիկական մոդելավորման արդյունքները:

Բանալի բառեր՝ EMG-ազդանշան, ESP32, AD8226, օժանդակ սարք, վերին վերջույթներ, PWM կառավարում, մաթեմատիկական մոդելավորում, ռոբոտացված ձեռնոց, կաթվածահարություն:

СРАВНИТЕЛЬНЫЙ АНАЛИЗ СУЩЕСТВУЮЩИХ УЗЛОВ УПРАВЛЕНИЯ ВСПОМОГАТЕЛЬНЫМИ УСТРОЙСТВАМИ, УПРАВЛЯЕМЫЕ EMG-СИГНАЛАМИ ДЛЯ ЛИЦ С НАРУШЕНИЯМИ ФУНКЦИЙ ВЕРХНИХ КОНЕЧНОСТЕЙ И ЕЕ РЕАЛИЗАЦИЯ

М.В. Мкртчян, А.Л. Смбатян
Национальный университет архитектуры и строительства Армении

Рассматриваются проблемы разработки узла управления вспомогательного устройства, предназначенного для восстановления функций верхних конечностей лиц с соответствующими нарушениями. Представлен сравнительный анализ существующих технологических платформ, включая мягкие роботизированные перчатки, экзоскелетные системы и устройства функциональной электрической стимуляции

(FES). Рассмотрены также их технологические ограничения и возможности оптимизации с точки зрения доступности, скорости реакции и индивидуализации. Предложено решение на основе обработки EMG-сигналов (electromyography) с использованием микроконтроллера ESP32. Обоснованы преимущества предлагаемой системы с точки зрения точности, компактности и низкой стоимости. Представлены результаты реальных экспериментов и математического моделирования.

Ключевые слова: EMG сигнал, ESP32, AD8226, вспомогательное устройство, верхние конечности, PWM управление, математическое моделирование, роботизированная перчатка, паралич.

Submitted on 24.07.2026
Sent for review on 30.07.2026
Guaranteed for printing on 02.11.2026