Bulletin Of High Technology N1(25) 2023.-pp. 67-80.

O.N. Gasparyan, V.H. Ispiryan, G.A. Melkonyan, T.A. Simonyan

UDC - 623.746.4:62-503.55

# ROBUSTNESS ANALYSIS OF UAVS' CONTROL SYSTEMS IN CASE OF MOTORS' PARTIAL EFFICIENCY DEGRADATION

**Oleg N. Gasparyan**
National Polytechnic University of Armenia
105 Teryan St. 0009, Yerevan
ogasparyan@polytechnic.am
ORCID iD: 0000-0003-2062-4147
Republic of Armenia

**Vahe H. Ispiryan**
National Polytechnic University of Armenia
105 Teryan St. 0009, Yerevan
vaheispiryan4@gmail.com
ORCID iD: 0000-0002-0710-8634
Republic of Armenia

**Gohar A. Melkonyan**
National Polytechnic University of Armenia
105 Teryan St. 0009, Yerevan
goharik-melqonyan@mail.ru
ORCID iD: 0000-0003-2949-4588
Republic of Armenia

**Tariel A. Simonyan**
National Polytechnic University of Armenia
105 Teryan St. 0009, Yerevan
simonyantariel07@gmail.com
ORCID iD: 0000-0001-7519-8558
Republic of Armenia

https://doi.org/10.56243/18294898-2023.1-67

**Abstract**

Multirotor unmanned aerial vehicles (UAVs) are widely used in military tasks, as well as in various civilian areas such as agriculture, search and rescue operations, detection of fires in forests, traffic monitoring, etc. In real flights of the UAVs some unexpected situations may occur bringing to failures of various elements or devices of the UAV's control system. This, in turn, can lead to the crush and complete collapse of the entire vehicle. First of all, it concerns the DC motors and propellers, which, as opposed to electronic devises and sensors, cannot be duplicated. A method of analysis of robustness of UAV's control systems with respect to possible partial efficiency degradation of motors is proposed in the paper. The ultimately allowable efficiency degradation is determined by a simple graphical procedure on

the complex plane of the Nyquist hodographs of the system's separate channels. A numerical example illustrating the proposed method of analysis of the UAV's control system robustness is given.

***Key words:*** multirotor UAV, motors efficiency degradation, multivariable control system, additive uncertainty, robustness.

**Introduction**

Multicopters, or $N$ -rotor copters, also called multirotor unmanned aerial vehicles (UAV), are widely used in various military, search and rescue, and other civilian fields including: road traffic monitoring; detection of fires in forests; monitoring the technical condition of buildings, railways and roads; technical support in agricultural works and geological exploration, etc. [1-3].

In real flights of the UAVs some unexpected situations may occur bringing to failures of various elements or devices of the UAV's control system. This, in turn, can lead to the crush and complete collapse of the aerial vehicle. Therefore, the safety and survivability of UAVs are nowadays of paramount importance. Especially, it concerns the tasks carried out in urban areas, since any failure or fault occurred in a UAV may not only bring to its crash, but also cause damage in its surroundings and even expose human beings to injury risks.

That is why the so-called fault-tolerant control systems of UAVs have attracted much interest among researchers in recent years [4, 5]. Many advanced control methodologies have been proposed to overcome the problem of elements' failures, including optimal control, model predictive control, model reference and $L_1$ adaptive control [6], sliding mode control and some others. Most of these methodologies bring to complicated technical solutions and are very rarely used in practice.

Another widely used and effective approach to solving the problem is based on methods of robust control [7, 8]. These methods allow engineers to develop systems that are rather simple in practical realization but can tolerate, to a certain extent, efficiency degradation (not complete failure) of some systems' elements.

It should be noted here that the problem of failures of UAV's control system elements primarily concerns the direct current (DC) motors and propellers, which, as opposed to electronic devises and sensors, cannot be duplicated.

A method of analysis of robustness of UAV's control systems with respect to possible partial efficiency degradation of motors is proposed in the paper. The ultimately allowable efficiency degradation is determined by a simple graphical procedure on the complex plane of the Nyquist hodographs of the system's separate channels. A numerical example illustrating the proposed method of analysis of the UAV's control system robustness is given.

**Rigid-Body Dynamics of UAVs.**

In this section, we consider rigid-body dynamics equations of multirotor UAVs [6,9]. Let {I} denotes a right-hand inertial frame with axes $x_I, y_I, z_I$, and {B}, a body-fixed frame with axes $x_B, y_B, z_B$ aligned along principal axes of inertia (Fig. 1). The position of the center

of mass of the UAV in the inertial frame {I} is given by the vector $\xi = (x, y, z)^T \in \{I\}$, and the orientation of frame {B} with respect to {I} is described by the orthogonal rotation matrix [6]

$$R = \begin{bmatrix} \cos\psi\cos\theta - \sin\phi\sin\psi\sin\theta & -\cos\phi\sin\psi & \cos\psi\sin\theta + \cos\theta\sin\phi\sin\psi \\ \cos\theta\sin\psi + \cos\psi\sin\phi\sin\theta & \cos\phi\cos\psi & \sin\psi\sin\theta - \cos\psi\cos\theta\sin\phi \\ -\cos\phi\sin\theta & \sin\phi & \cos\phi\cos\theta \end{bmatrix} \quad (1)$$

The transition from {I} to {B} is done by the subsequent rotations by Z-X-Y Euler angles denoted, respectively, $\psi$ (yaw), $\phi$ (roll), and $\theta$ (pitch), which can be combined into a pseudo-vector $\eta = [\phi, \theta, \psi]^T$.

Let us denote $m$ the mass of the UAV, $g$, the gravitational constant, $J$, the constant inertia tensor of the UAV expressed in {B}, $\omega = [\omega_x, \omega_y, \omega_z]^T \in \{B\}$, the angular velocity of {B} with respect to {I}, $J_R$, the identical inertias of $N$ rotors, $\Omega_i \ (i = 1, 2, \ ..., N)$, the angular velocities of the rotors.

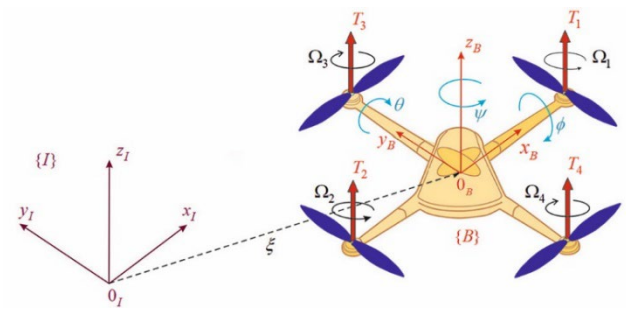


**Fig. 1 Schematic representation of the UAV (for $N = 4$)**

Then the standard nonlinear equations of motion of the N-rotor UAV can be written in the form [6], [9]:

$$m\frac{d^2\xi}{dt^2} = -mgz_I + RF, \quad (2)$$

$$J\frac{d\omega}{dt} + \omega \times \left(J\omega + \Upsilon_R\Omega\right) = \tau, \quad (3)$$

$$\frac{d\eta}{dt} = P(\eta)\omega, \quad (4)$$

where $\gamma_R = [0\ 0\ J_R]^T$, $\Omega$ denotes the total angular velocity of the rotors:

$$\Omega = \sum_{i=1}^{N} (-1)^{i-1}\Omega_i, \quad (5)$$

and the matrix $P(\eta)$ in the strapdown equation (4) is equal to

$$P(\eta)=\begin{bmatrix} \cos\theta & 0 & -\sin\theta \\ \sin\theta\ \mathrm{tg}\phi & 1 & \cos\theta\,\mathrm{tg}\phi \\ \sin\theta/\cos\phi & 0 & \cos\theta/\cos\phi \end{bmatrix} \tag{6}$$

The vectors $F$, $\tau=[\tau_x,\tau_y,\tau_z]^T\in\{B\}$ in the equations (2), (3) combine the principal non-conservative forces and moments applied to the UAV airframe by the aerodynamics of the $N$ rotors (assuming, for simplicity, no external disturbances). Each $i$th rotor generates a thrust $T_i$ which is proportional to the square of angular velocity $\Omega_i$ (i.e. $T_i=c_T\Omega_i^2$, $c_T>0$) and acts along the body-fixed axis $z_B$. Denoting the total thrust at hover by $T_\Sigma$ ($T_\Sigma=\sum_{i=1}^{N}T_i$), and by $\bar{T}$, the N-dimensional vector of thrusts $T_i$ ($\overline{T=}\ [T_1,T_2,\dots T_N]^T$), the mapping of $\bar{T}$ to the vector $[T_\Sigma,\tau]^T$ can be written, generally, in matrix form

$$\begin{bmatrix} T_\Sigma \\ \tau \end{bmatrix}=D_M\Lambda_M\bar{T}, \tag{7}$$

$$\Lambda_M=diag\{\lambda_i^M\}$$

where the $4\times N$ full-rank numerical matrix $D_M$ (often called a control allocation matrix) depends on the UAV geometry, number of rotors $N$, etc. [6], and $\lambda_i^M$ $(0<\lambda_i^M\le 1)$ are the motors' (unknown, but constant) degradation parameters. For properly functioning motors, the matrix $\Lambda_M$ is equal to the identity matrix $I$ (or $I_{N\times N}$, to indicate the order $N$ of the matrix $I$). Note that we exclude here the case $\lambda_i^M=0$ for any $i$, which corresponds to complete failure of the $i$-th motor.

Given the needed controls $T_\Sigma$ and $\tau$, the equation (7) allows computing the required thrusts $T_i$ (or, which is equivalent, the velocities $\Omega_i$) of rotors. For $N=4$, it can be done, assuming $\Lambda_M=I$, by inverting the matrix $B_M$, and the Moore-Penrose pseudoinverse should be used for $N=6$ or $N=8$ [9].

**Conventional Control System of UAVs**

Irrespective of the number of rotors $N$, the flight altitude $z$ and the vector of rotations $\eta=[\phi,\theta,\psi]^T$ are usually chosen as four control variables in the underactuated control systems of the UAVs, where their motion of along the inertial axis $z_i$ is described, based on (1), (2), and (7), by the following scalar equation:

$$m\frac{d^2z}{dt^2}=(\cos\phi\cos\theta)u_z-mg,$$

or (8)

$$\frac{d^2 z}{dt^2} = \frac{\cos\phi\cos\theta}{m} u_z - g \quad (u_z = T_\Sigma).$$

The block diagram of the UAV's nonlinear control system can schematically be depicted in the form presented in Fig. 2, where we admit a slight abuse of notations combining in the same block diagram the time-domain signals and the Laplace domain transfer functions and matrices.

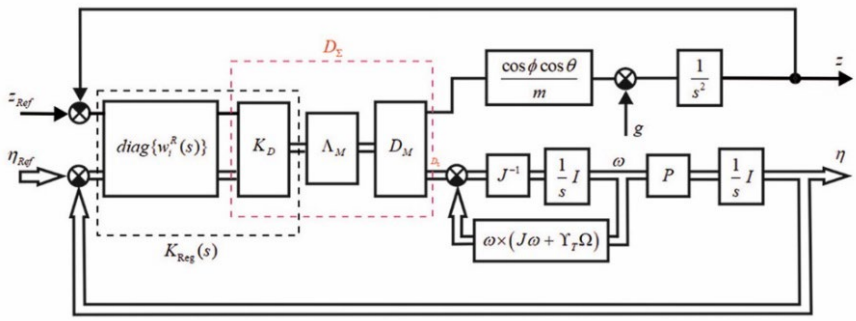


**Fig. 2 Matrix block diagram of the UAV control system**

The scalar signals in the block diagram in Fig. 2 correspond to the vertical motion $z$ of the UAV along the inertial axis $z_I$, the double lines designate vectors of appropriate dimensions (3 or N) and S is the Laplace operator. Note that in Fig. 2 we disregard, for simplicity, the dynamics of DC motors.

The system in Fig. 2 belongs to multi-input multi-output (MIMO) feedback control systems [10]. Structurally, the numerical control allocation matrix $D_M$ in (7) describes kinematic cross-connections between separate channels of the MIMO system, or, more correctly (if $N > 4$), the kinematic relations between N thrusts $T_i$ and four control signals $T_\Sigma$, $\tau_x, \tau_y, \tau_z$.

Commonly, the matrix regulator $K_{Reg}(S)$ in such systems is taken in the form

$$K_{\text{Reg}}(s) = K_D diag\{w_i^R(s)\}. \tag{9}$$

$K_D = D_M^{-1}$ for $N = 4$, and $K_D = D_M^{+}$ for $N = 6$ or $N = 8$,

where $D_M^+$ is the Moore-Penrose pseudoinverse of $D_M$, and $w_i^R(S)$ ($i = z, \phi, \theta, \psi$) are the scalar transfer functions of the regulators in separate channels. In practice, the standard PID regulators are often used as $w_i^R(S)$ in (9).

Let us denote $D_\Sigma = \{d_{ij}^\Sigma\}$ the following matrix:

$$D_\Sigma = D_M \Lambda_M K_D = D_M \Lambda_M D_M^+. \tag{10}$$

In case of no motors' degradations (i.e. $\Lambda_M = I_{N\times N}$), we have $D_\Sigma = I_{4\times 4}$ for any $N$, i.e. the kinematic cross-connections between four separate channels of the system in Fig. 2 are

compensated. For that reason, the regulator $K_{Reg}(S)$ (9), which incorporates a matrix part $K_B = D_M^+$, is usually called decoupling regulator [10].

In what follows, not to encumber the exposition with complex formulas, when analyzing robustness of the control system we shall assume that the angles and angular velocities of the UAV are so small that the nonlinear terms in the dynamics equations of rotational motions (3) can be neglected, and the cosines of all angles are approximately equal to unity. On these conditions, the dynamics equations (2)-(4) take on the following linearized form

$$\frac{d^2 z}{dt^2} = \frac{1}{m} T_\Sigma - g \quad , \tag{11}$$

$$J \frac{d\omega}{dt} = \tau \quad , \tag{12}$$

and the matrix block diagram of the UAV control system in Fig. 2 reduces to the simplified form shown in Fig. 3.

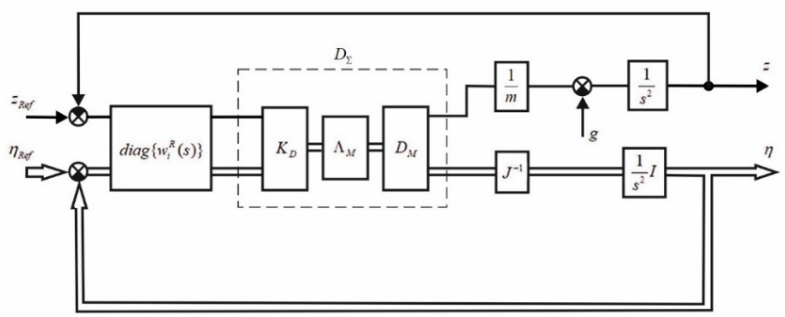


**Fig. 3 Matrix block diagram of the linearized control system of the UAV**

If $\Lambda_M = I_{N\times N}$ and $K_D = D_M^+$, that is if $D_\Sigma = I_{4\times 4}$, then all kinematic cross-couplings between separate channels of the linearized MIMO control system in Fig. 3 are compensated and the system reduces to four independent single-input single-output (SISO) linear systems. As an instance, the roll channel $\phi$ of the decoupled linear MIMO control system in Fig. 3 is shown in Fig. 4 where $I_x$ is the moment of inertia around the $x_B$ axis. Note that the dynamics of the plant in Fig. 4 is described by a double integrator (i.e., by two zero poles at the origin of the complex plane).

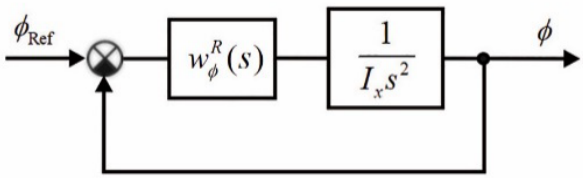


**Fig. 4 Block diagram of the decoupled linear control system (the roll channel $\phi$)**

In case of motors' partial degradations, i.e. for $\Lambda_M \neq I_{N\times N}$ and $D_\Sigma \neq I_{4\times 4}$, the linear MIMO system in Fig. 3 is cross-coupled and the dynamics of the system is described by four

independent double integrators. This means that in the state-space, the multivariable plant has eight zero eigenvalues.

**Conflict Setting**

To proceed in the analysis of the robust conditions, it is more appropriate to transform the matrix block diagram in Fig. 4 to the equivalent four-dimensional case in Fig. 5, where the vectors $\zeta(s)$, $\rho_{\text{Out}}(s)$ of size 4x1 and the 4x4 diagonal matrix $M$ are given by the following expressions:

$$\zeta(s)=\begin{bmatrix} z_{\text{Ref}}(s) \\ \eta_{\text{Ref}}(s) \end{bmatrix}, \quad \rho_{\text{Out}}=\begin{bmatrix} z(s) \\ \eta(s) \end{bmatrix}, \quad M_{\Sigma}=\begin{bmatrix} m & 0 & 0 & 0 \\ 0 & I_x & 0 & 0 \\ 0 & 0 & I_y & 0 \\ 0 & 0 & 0 & I_z \end{bmatrix}, \tag{13}$$

in which the components of the three-dimensional vector $\eta$ in the four-dimensional vector $\rho_{\text{Out}}(s)$ are the roll ($\phi$), pitch ($\theta$), and yaw ($\psi$) angles, i.e. $\eta=[\phi,\theta,\psi]^T$.

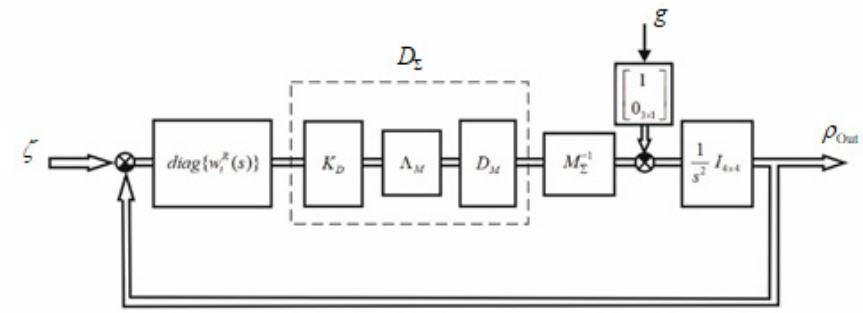


**Fig. 5 Transformed block diagram of the linear control system of the UAV**

**Research Results**

**Robust Analysis Control of the UAV's Control System in case of Motors' Partial Degradations.**

The transfer matrix of the open-loop MIMO system in Fig. 5 in case of $\Lambda_M \neq I$ has the form:

$$W(s)=\frac{1}{s^2}M_{\Sigma}^{-1}D_{\Sigma}diag\left\{w_i^R(s)\right\}. \tag{14}$$

In what follows, we shall admit for simplicity that all $w_i^R(s)$ regulators in (9) are identical, that is $w_i^R(s)=w_R(s)$. Then, instead of (14), we can write down

$$W(s)=w(s)R, \tag{15}$$

where $w(s)=w_R(s)/s^2$ and $R=M_{\Sigma}^{-1}D_{\Sigma}$.

In the theory of multivariable control, such systems, that is MIMO systems with identical transfer functions $w(s)$ of separate channels and rigid cross-connections described by square numerical matrix $R$, are called uniform MIMO systems [10].

The transfer matrix $\Phi(s)$ of the closed-loop control system of the UAV in Fig. 5 with respect to output signals is equal to

$$\Phi(s) = \left[I + W(s)\right]^{-1} W(s) = w(s)R\left[I + w(s)R\right]^{-1}, \tag{16}$$

and the stability of the closed-loop system is determined by the locations of the roots of the characteristic equation

$$\det[I + W(s)] = \det\left[I + w(s)R\right] = 0. \tag{17}$$

Note, that in case of normally functioning motors, that is in case $\Lambda_M = I$, the matrix $R$ in (15) equals $M_{\Sigma}^{-1}$ and, instead of (16) and (17), we have

$$\Phi(s) = \begin{bmatrix} \frac{w(s)/m}{1+w(s)/m} & 0 & 0 & 0 \\ 0 & \frac{w(s)/I_x}{1+w(s)/I_x} & 0 & 0 \\ 0 & 0 & \frac{w(s)/I_y}{1+w(s)/I_y} & 0 \\ 0 & 0 & 0 & \frac{w(s)/I_z}{1+w(s)/I_z} \end{bmatrix} \tag{18}$$

$$\det\left[I + W(s)\right] = \left[1 + w(s)/m\right]\left[1 + w(s)/I_x\right]\left[1 + w(s)/I_y\right]\left[1 + w(s)/I_z\right] = 0, \tag{19}$$

that is the transfer matrix of the closed-loop system takes on a diagonal form, and the characteristic equation reduces to the product of four characteristic equations of separate channels.

In other words, in case of $\Lambda_M = I$, the stability of the UAV's control system is determined by stability of independent separate channels.

Let us discuss now the robustness of the UAV's control system with respect to possible losses of the motors' partial degradations. In accordance with the general robust theory [7,8], represent the matrix $\Lambda_M$ in (10) as a sum of the ideal (unit) matrix $I$ and the additive uncertainty $\Delta_M$, i.e. in the form

$$\Lambda_M = I + \Delta_M, \tag{20}$$

where the diagonal elements of the diagonal matrix $\Delta_M$ are equal to $\lambda_i^M - 1$.

Then the robustness condition of the UAV's control system with respect to additive uncertainty $\Delta_M$ can be written in the following form [7]:

$$\| \Phi(j\omega) \|_\infty \le \frac{1}{\| \Delta_M \|}, \tag{21}$$

where $\| \Delta_M \|$ denotes the spectral norm of the matrix $\Delta_M$ which is equal to the largest of modulus of the diagonal elements of the matrix $\Delta_M$. The so-called Hardy norm $\| \Phi(j\omega) \|_\infty$ in (21) is determined as the strict upper bound of the largest singular value (denoted as $\bar{\sigma}$) of the transfer matrix $\Phi(j\omega)$ (18) of the ideal control system over the whole frequency range of $\omega$ $(0 \le \omega \le \infty)$, and is equal to:

$$\| \Phi(j\omega) \|_\infty = \sup_\omega \bar{\sigma}\left(\Phi(j\omega)\right). \tag{22}$$

It is easy to notice that for the diagonal transfer matrix $\Phi(s)$ (18), the largest singular value $\bar{\sigma}$ at any frequency $\omega$ is determined as the largest of the absolute values of diagonal elements of the matrix $\Phi(j\omega)$. This allows one to impart a simple geometrical interpretation to the robust condition (21). Let us re-wright the condition (21), accounting for (18) and (22) and the above remark, in the form

$$\sup_\omega \left[ \max_i \left| \frac{w_i(j\omega)}{1 + w_i(j\omega)} \right| \right] \le \frac{1}{\| \Delta_M \|}, \tag{23}$$

where $w_i(j\omega)$ ($i = 1,2,3,4$) denote the transfer functions of the separate channels of the open-loop control system of the UAV in case of $\Lambda_M = I$ (e.g., $w_1(j\omega) = w(j\omega)/m,\ w_2(j\omega) = w(j\omega)/I_x,$ etc.).

Then, to get the numerical estimates of allowable motors' partial degradations based on the condition (23), one can use the well-known in the classical feedback control graphical procedure of determining the oscillation index (or peak gain) of the SISO control systems [11]. It can be shown that on passing in (23) to the equality sign, that condition for any $i$ is reduced to the form

$$\left[ \mathrm{Re}\{w_i(j\omega)\} + \frac{1}{1 - \| \Delta_M \|^2} \right]^2 + \left[ \mathrm{Im}\{w_i(j\omega)\} \right]^2 = \frac{\| \Delta_M \|^2}{(1 - \| \Delta_M \|^2)^2}. \tag{24}$$

Geometrically, this expression determines on the complex plane of the hodograph $w_i(j\omega)$ a circle with the center in the point $C$ with the coordinates $\{-1/(1 - \| \Delta_M \|^2), j0\}$

and the radius $r = \| \Delta_M \| / (1 - \| \Delta_M \|^2)$. The allowable value $\| \Delta_M \|_i$ for any $i$ is determined by the radius of the circle which touches the hodograph $w_i(j\omega)$, and for the whole control system, the allowable motors' degradation is equal, based on the condition (23), to the minimal value of all $\| \Delta_M \|_i$ ($i = 1,2,3,4$).

Note that for $\| \Delta_M \| \to 0$, the circle (24) shrinks to the critical point $\{-1, j0\}$. Note, also, that, by definition, the norm $\| \Delta_M \|$ is always less than unity.

**Numerical example**

Consider a control system of a quadrotor with the following parameters: $m = 2.5\,kg$, $I_x = I_y = I_z = 0.5\,kg \cdot m^2$. The matrices $D_M$ and $K_D = D_M^{-1}$ are equal to

$$D_M = \begin{bmatrix} 1.0 & 1.0 & 1.0 & 1.0 \\ 0 & 0.2 & 0 & -0.2 \\ -0.2 & 0 & 0.2 & 0 \\ -0.3 & 0.3 & -0.3 & 0.3 \end{bmatrix}, \quad K_D = \begin{bmatrix} 0.25 & 0 & -2.5 & -0.833 \\ 0.25 & 2.5 & 0 & 0.833 \\ 0.25 & 0 & 2.5 & -0.833 \\ 0.25 & -2.5 & 0 & 0.833 \end{bmatrix}, \tag{25}$$

and identical PID-regulators with the transfer function

$$w_R(s) = 0.0928 + \frac{0.0043}{s} + \frac{5.25}{0.1834s + 1} \tag{26}$$

are chosen as regulators in separate channels. The transfer function (26) is obtained by using the graphical interface pidTuner of the package Control System Toolbox in MATLAB. In Fig. 6, there are shown the Nyquist hodographs $w_1(j\omega)$ and $w_2(j\omega) = w_3(j\omega) = w_4(j\omega)$ of the separate channels of the UAV's control system with PID-regulators (26) and the circle tangent to the hodographs $w_{2,3,4}(j\omega)$ is drawn.

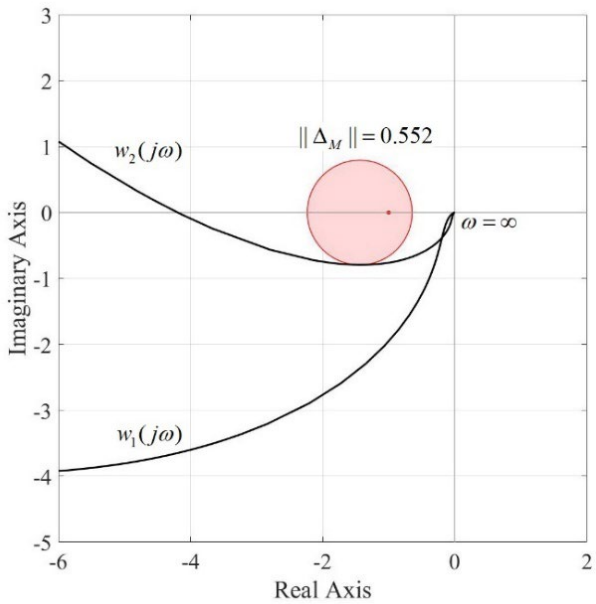


**Fig. 6 Robustness analysis of the UAV' control system**

Based on (24), this circle determines the largest allowable value of the additive uncertainty equal to $\| \Delta_M \| = 0.552$. Correspondingly, the smallest allowable value of the coefficient of motors partial degradation equals $\max(\lambda_i^M) = 0.448$. Further loss of motors effectiveness (i.e. the smaller values of $\lambda_i^M$) may result in loss of stability of the UAV's control system.

Altitude channel (flight height) transient responses of the ideal UAV's control system and control system with motors' efficiency degradation (for $\max(\lambda_i^M) = 0.3$) are shown in Fig. 7 and Fig. 8. As can be seen from Fig. 8, the control system with motors' efficiency degradation is unstable.

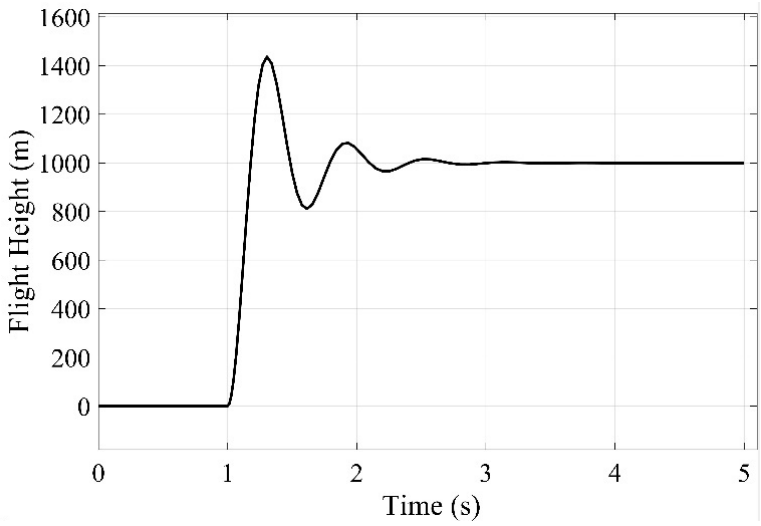


**Fig. 7 Transient response of ideal control system**

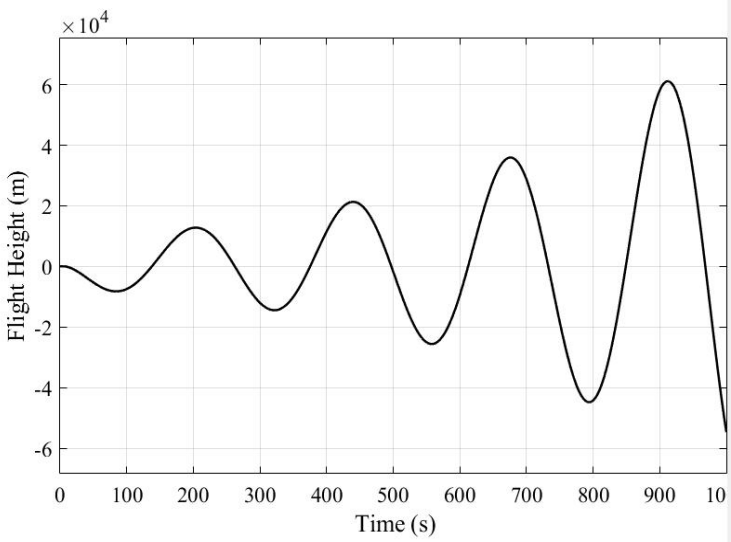


**Fig. 8 Transient response in case of motors' efficiency degradation**

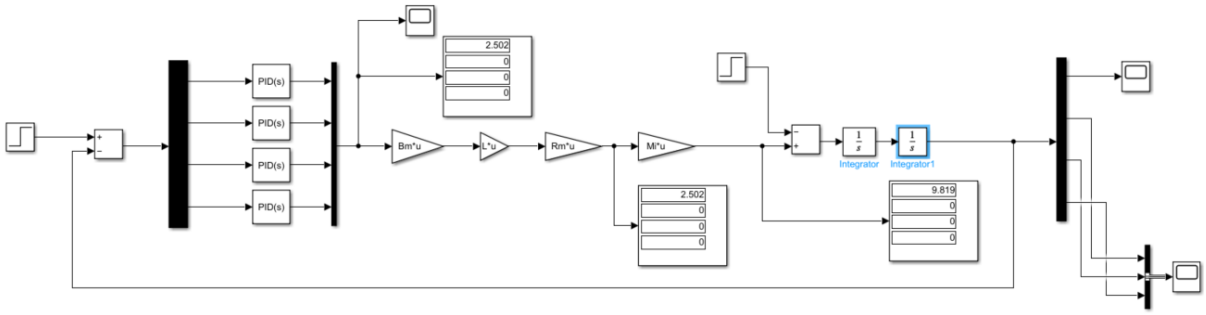


**Fig. 9 Simulink model of the UAV's control system**

The transient responses in Fig. 7 and Fig. 8 were obtained by the UAV's control system Simulink model shown in Fig. 9.

## Conclusion

A method of analysis of robustness of the UAV's control system with respect to possible loss of effectiveness of motors which is presented as an additive uncertainty, is proposed in the paper. The largest allowable loss of effectiveness (or partial degradation) of motors is determined by a simple graphical procedure on the complex plane of Nyquist hodographs of separate channels of the UAV's control system. A numerical example illustrating the proposed method of robustness analysis is given.

## References

1. Hassanalian M., Abdelkefi A. (2017) Classifications, applications, and design challenges of drones: a review. Progress in Aerospace Sciences, 2017, vol. 91.- p. 99-131.
2. Huang Y., Thomson S.J., Hoffmann W.C., Lan Y., Fritz B.K. (2013) Development and prospect of unmanned aerial vehicle technologies for agricultural production management. International Journal of Agricultural and Biological Engineering, vol. 6(3), pp. 1-10. USDA-ARS, Nebraska.
3. Yushu Y., Yiqun D. (2019) Global Fault-Tolerant Control of Underactuated Aerial Vehicles with Redundant Actuators. Hindawi, Intern. Journal of Aerospace Engineering, pp. 1-12.
4. Schneider T. (2011) Fault-tolerant Multirotor Systems. Swiss Federal Institute of Technology, Zurich.
5. Peng L., Erik-Janvan K., Bin Y. (2014) Actuator Fault Detection and Diagnosis for Quadrotors. Concordia University, Montreal.
6. Gasparyan O., Darbinyan H. (2019) $L_1$ Adaptive Control of Quadcopters. CSIT Conference 2019, IIAP, Yerevan, 2019.-p. 137-140.
7. Green M., Limebeer D. J. N. Linear Robust Control. Prentice Hall, Englewood Cliffs, 1995.
8. Kwakernaak H. (1993) Robust control and H-optimization. Automatica, 29:255–273, 1993.
9. Mahony R., Kumar V., Corke P. (2012) Multirotor aerial vehicles: Modeling, estimation, and control of quadrotor. Robotics and Automation Magazine, 2012, 19(3).- p. 20-32.
10. Gasparyan O.N. (2008) Linear and Nonlinear Multivariable Feedback Control: A Classical Approach. John Wiley & Sons Ltd, UK, 2008.- 374 p.
11. Dorf R., Bishop R. (2016) Modern Control Systems, Pearson, 13-th edition, 2016.-1032 p.

Bulletin Of High Technology N1(25) 2023.-pp. 67-80.

O.N. Gasparyan, V.H. Ispiryan, G.A. Melkonyan, T.A. Simonyan

# ԱՆՕԴԱՉՈՒ ԹՌՉՈՂ ՍԱՐՔԵՐԻ ԿԱՌԱՎԱՐՄԱՆ ՀԱՄԱԿԱՐԳԵՐԻ ՌՈԲԱՍՏՈՒԹՅԱՆ ՎԵՐԼՈՒԾՈՒԹՅՈՒՆԸ ՇԱՐԺԻՉՆԵՐԻ ՄԱՍՆԱԿԻ ԽԱՓԱՆՈՒՄՆԵՐԻ ԴԵՊՔՈՒՄ

**Գասպարյան Օ.Ն., Իսպիրյան Վ.Հ, Մելքոնյան Գ.Ա., Սիմոնյան Տ.Ա.**
*Հայաստանի ազգային պոլիտեխնիկական համալսարան*

Բազմառոտորային անօդաչու թռչող սարքերը (ԱԹՍ) լայնորեն օգտագործվում են ռազմական առաջադրանքներում, ինչպես նաև տարբեր քաղաքացիական ոլորտներում, ինչպիսիք են գյուղատնտեսությունը, որոնողափրկարարական աշխատանքները, անտառներում հրդեհների հայտնաբերումը, երթևեկության մոնիտորինգը և այլն: Անօդաչու թռչող սարքերի իրական թռիչքներում որոշ անսպասելի իրավիճակների հետրանքով կարող են առաջանալ կառավարման համակարգի տարբեր տարրերի կամ սարքերի խափանումներ: Սա, իր հերթին, կարող է հանգեցնել ամբողջ համակարգի փլուզմանը և ԱԹՍ-ի ոչնչացմանը: Առաջին հերթին խոսքը վերաբերում է DC շարժիչներին և պտուտակներին, որոնք, ի տարբերություն էլեկտրոնային սարքերի և տվիչների, չեն կարող կրկնօրինակվել: Աշխատանքում առաջարկվում է անօդաչու թռչող սարքերի կառավարման համակարգերի ռոբաստության վերլուծության մեթոդ, շարժիչների հնարավոր արդյունավետության մասնակի կորստի դեպքում: Արդյունավետության առավելագույն թույլատրելի կորուստը որոշվում է պարզ գրաֆիկական եղանակով, կոմպլեքս հարթության վրա համակարգի առանձին կապուղիների Նայքվիստի հոդոգրաֆներով: Ներկայացված է ԱԹՍ-ի կառավարման համակարգի ռոբաստության վերլուծության առաջարկված մեթոդը պարզաբանող թվային օրինակ:

***Բանալի բառեր.*** բազմառոտորային ԱԹՍ, շարժիչների արդյունավետության կորուստ, բազմաչափ կառավարման համակարգ, ադիտիվ անորոշություն, ռոբաստություն:

# АНАЛИЗ РОБАСТНОСТИ СИСТЕМ УПРАВЛЕНИЯ БПЛА В СЛУЧАЕ ЧАСТИЧНОЙ ПОТЕРИ ЭФФЕКТИВНОСТИ ДВИГАТЕЛЕЙ

**Гаспарян О.Н., Испирян В.Г., Мелконян Г.А., Симонян Т.А.**
*Национальный политехнический университет Армении*

Многороторные беспилотные летательные аппараты (БПЛА) широко используются в военных целях, а также в различных гражданских областях, таких как сельское хозяйство, поисково-спасательные работы, обнаружение лесных пожаров, мониторинг движения транспорта и т.д. В реальных полетах БПЛА возникают непредвиденные ситуации приводящие к отказам различных элементов или устройств системы управления БПЛА. Это, в свою очередь, может привести к крушению и полному уничтожению летательного аппарата. В первую очередь это касается двигателей постоянного тока и пропеллеров, которые, в отличие от электронных

устройств и датчиков, не могут быть продублированы. В статье предложен метод анализа робастности систем управления БПЛА в случае возможной частичной потери эффективности моторов. Предельно допустимая потеря эффективности определяется простой графической процедурой на комплексной плоскости годографов Найквиста отдельных каналов системы. Приведен численный пример, иллюстрирующий предложенный метод анализа робастности системы управления БПЛА.

***Ключевые слова*:** многороторный БПЛА, потеря эффективности двигателей, многомерная система управления, аддитивная неопределенность, робастность.

Submitted on 22.12.2022
Sent for review on 23.12.2022
Guaranteed for printing on 28.04.2023