ISSN 1829-488X
ISSN online 1829-4898

ՏԵՂԵԿԱԳԻՐ
ԲԱՐՁՐ ՏԵԽՆՈԼՈԳԻԱՆԵՐԻ

ИЗВЕСТИЯ
ВЫСОКИХ ТЕХНОЛОГИЙ

BULLETIN
OF HIGH TECHNOLOGY

1(25)/2023

ՍՏԵՓԱՆԱԿԵՐՏ – СТЕПАНАКЕРТ – STEPANAKERT

2023

ԲԱՐՁՐ ՏԵԽՆՈԼՈԳԻԱՆԵՐԻ ՏԵՂԵԿԱԳԻՐ
ИЗВЕСТИЯ ВЫСОКИХ ТЕХНОЛОГИЙ
BULLETIN OF HIGH TECHNOLOGY

Տեղեկագիրը հրատարակվում է Ակադեմիկոս Ի.Վ.Եղիազարովի ջրային հիմնահարցերի և հիդրոտեխնիկայի ինստիտուտի, Հիդրավլիկական հետազոտությունների հայկական ազգային ասոցիացիայի, Երևանի կապի միջոցների գիտահետազոտական ինստիտուտի և Շուշիի տեխնոլոգիական համալսարանի կողմից: Հիմնադրվել է 2016թ.: Լույս է տեսնում տարեկան 4 անգամ:

Известия издают институт водных проблем и гидротехники им. академика И.В. Егиазарова, Армянская национальная ассоциация по гидравлическим исследованиям, Ереванский научно-исследовательский институт средств связи и Шушинский технологический университет. Основан в 2016г. Издаётся 4 раза в год.

Bulletin is published by Yerevan Institute of Water Problems and Hydro-Engineering Named After I.V. Yeghiazarov, National Association of Hydraulic Research, Yerevan telecommunication research institute, Shushi university of technology. Established in 2016. Published 4 times a year.

Տեղեկագիրն ընդգրկված է ՀՀ ԲՈԿ-ի կողմից դոկտորական և թեկնածուական ատենախոսությունների համար ընդունելի հանդեսների ցանկում:
Известия высоких технологий включена в список журналов приемлемых ВАК РА для докторских и кандидатских диссертаций.
Bulletin is included in the list of journals for doctoral and PhD dissertations adopted by SQC of the Republic of Armenia.

Գրանցման վկայականի համարը՝ 211.171.05236
Տպաքանակ՝ 101 օրինակ:
Պատվեր թիվ 29:
Ստորագրված է տպագրության՝ 02.05.2023թ.
Թուղթը՝ օֆսեթ: Ծավալը մամուլ 14,75:
e-mail: info@bulletin.am

Հասցե՝ Երեւան, Արմենակյան 125
Адрес: Ереван, ул. Арменакяна 125
Address: 125 Armenakyan street, Yerevan
Tel. (+37493) 001030
Url: www.bulletin.am
ISSN 1829-488X, ISSN online 1829-4898

UDC - 726.825.1/.4

NEWLY DISCOVERED COLLOSUS FROM SANCTUARY CALLED «LUSAVORCHI SAR» NEAR SOS VILLAGE OF ARTSAKH

Manushak K. Titanyan
Shushi University of Technology
7 V.Vagharshyan, Stepanakert, AR
manush.titan@gmail.com
ORCID iD: 0000-0001-6251-1808
Artsakh Republic

https://doi.org/10.56243/18294898-2023.1-3

Abstract

Architectural-archaeological diggings were carried out in the sanctuary called «Lusavorchi Sar» located in the vicinity of Sos village of Artsakh in 2019 as a result of which fragments of early medieval memorial monuments as well as traces of other buildings were discovered (archaeolog V.Saafaryan). The sanctuary is rich in many fragments that speak of other, yet undiscovered structures. For the purpose of the study, metrical, documentary, analytical and comparative works of the newly discovered material were carried out, the historical memorials were observed related to the shrine, the period and the similar historical-architectural material in the surrounding areas. As a result of the study and combination of the fragments, the reconstruction drawings of the monumental colossus were given. The territory of the sanctuary has not been fully explored and may new materials and explorations may be revealed. It is necessary to study the found materials, to classify them according to time and typology and to present them to the scientific community in order to complete the existing database of studies on the cult and historical monuments of Artsakh.

Key words: early medieval colossuses, sanctuary, winged cross, stone colossus, cross bearer, pillar.

Introduction

The Christian cultural heritage of Artsakh originates from the roots of the history of the Christian period of Armenians. Early Christian architectural monuments are located in various regions of the historical territory of Artsakh. Traces of the aforementioned heritage were found in the vicinity of Sos, Chartar, Berdashen and Machkalashen villages of the historical Haband province now called Martuni region[1], in Tigranakert [2] and, of course, in Amaras. The Tomb of Grigoris is the best-preserved evidence of the latter. The newly opened group of monuments is closely related to Grigoris in terms of historical, chronological and architectural composition. The place was a shrine-pilgrimage place with a stone anchor placed in the center as an object of worship (Fig.1). Candles were lit on the anchor for years, as a result of which

the stone anchor was cracked and divided into two unequal parts. The latter became the reason for the cleaning works.

Materials and methods

The monument is situated to the north of Sos village of Martuni region on the forest fill at the altitude of 993 m above sea level. Chartar and Machkalashen villages are located nearby.

"Aghjkaberd" is located in Berdashen where an early medieval stone crucifix, pillar head of a monument and other fragments have been preserved [3]. Historically, the region has been the center of preaching and spreading Christianity. The latter circumstance is confirmed by the fact that the first Mashtots school in Artsakh was founded in this region. Bishop Makar Barkhudaryan writes: «Mountain of Lusavorich is raised above the head of my village, towards the east. Above it there are many fallen stones, house yards and a church ruin. Traditionally it is told that St. Gregory Lusavorich climbed up to the mountain pray till dawn while he was preaching and establishing churches. When the disciples brought the body of the Catholicos St. Grigoris Aghvan from Dorbant to the mountain, the soldiers of the martyred king, following the officers and soldiers who captured his body came here. However, the disciples, relying on God and turning to the place where Saint Grigoris prayed, were freed from the persecutors and then took the body to the Amaras monastery for burial and after fled to Armenia» [4].

Fig. 1 Stone anchor in the middle of sanctuary as the object of worship and the floor raised in the east

During the cleaning of the sanctuary, many pottery materials and fragments of lamps, candlesticks and tiles were found. The discovered stone fragments and their belonging to the monuments are of great interest to us. It should be first noted that after cleaning the sanctuary, it was found that the area around the anchor was enclosed irregularly in a quadrangle with

plan dimensions of 9.7x6.0m (Fig. 2). The three corners of the enclosed area are 97, 86, 103 degrees and the northeast is 65 degrees.

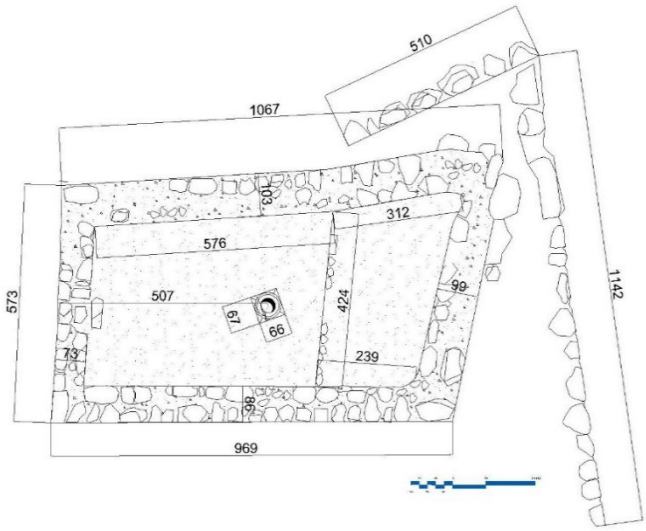

Fig. 2 Floor plan of the sanctuary. Topography

The enclosed area has approximately east-western orientation on its length. Archeologist Vardges Safaryan finds that the structure is a Christian church or chapel. But the opinion remains doubtful [5]. The structure has no basement, the walls are simply built with stones put on each other and even the walls are built with approximate angles. To the south-east the floor is arisen by small amount of soil. Entrance edge stones in the western part of enclosed area were put probably using old angle stones (Fig. 3).

Fig. 3 Entrance in the western part

A section of wall with rough stones passes through the eastern part of the described area. It has a correct north-south orientation. Details of stone colossus were found in the area, which suggest that the place was sanctified with cross colossuses and established as a Christian environment [6]. Among the first finds outside the enclosure is a stone square anchor. It has a cube-shaped surface where the opposite sides are not equal. The dimensions of the anchor platform are equal to 49 and 52.5 cm in the floor plan, 42 and 46 cm in the upper platform, respectively, with a cube height of 44 cm. Three of the facades are sculpted with simple isosceles crosses (Fig. 4, 5, 6).

Fig. 4 I facade of the first tetrahedral anchor

Fig. 5 II facade of the first tetrahedral anchor

Fig. 6 III facade of the first tetrahedral anchor

Fig. 7 IV facade of the first tetrahedral anchor

Fig. 8 Lower platform of the first anchor

Fig. 9 Upper platform of the first tetrahedral tetrahedral anchor

The fourth facade is simple (Fig. 7) and probably, it was the unobserved part of the colossum. The upper surface of the stone becomes octagonal polygon in the floorplan with uneven sides.

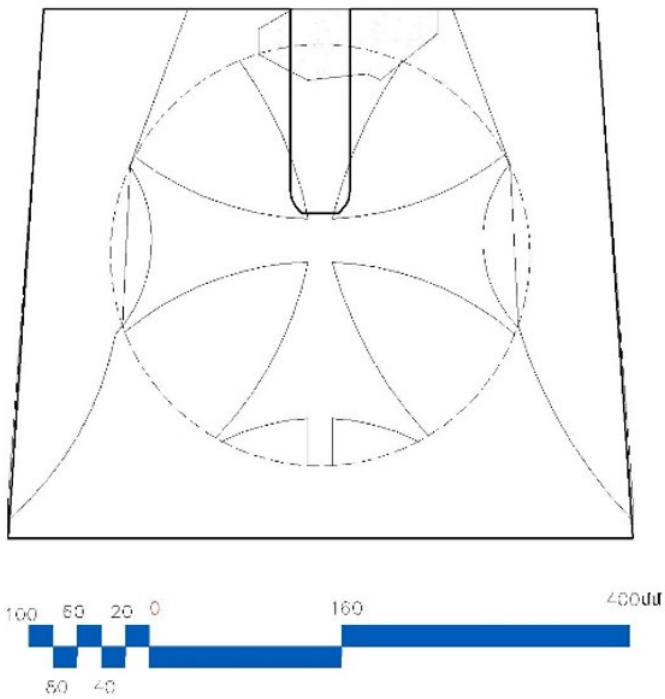

Fig. 10 Anchor topography

There is a hole with a diameter of 90 mm and a depth of 170 mm (Fig. 8), on the platform where the pillar stone was placed the purpose of which will be described below.

The anchor-table sides are inclined to the vertical plane (Fig. 10), as in the case of Avan colossus [7, 8]. From the treatment of the surface of the lower platform of the anchor, it can be seen that the latter sat on the limestone platform of the main anchor (Fig. 8), which served as a pedestal for the anchor table [9].

Fig. 11 Tetrahedral pillar, general view

Another detail of the described monument is the tetrahedral pillar (Fig. 11). It was found in a broken state, but all the parts are there and give an idea of what the monument was like. The pillar has 30 cm sides at the base of the table and 17 cm sides at the top. The lower part is tetrahedral. In the middle part, the part becomes octahedral, and in the main part it becomes tetrahedral again (Fig. 12).

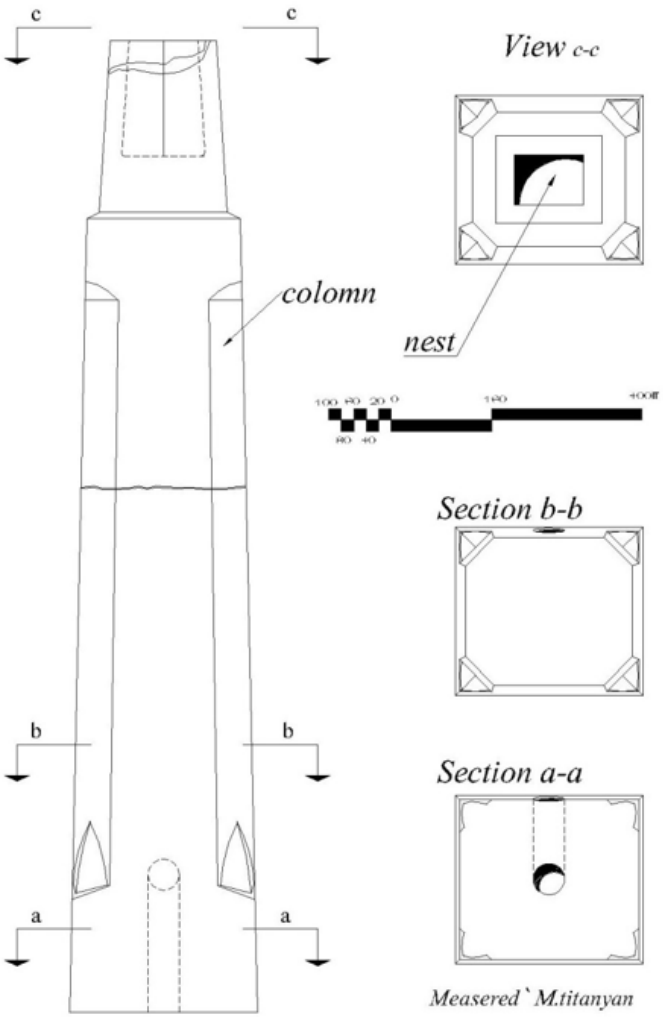

Fig. 12 Tetrahedral pillar, topography

Fig. 13 Chapiter of tetrahedral pillar

The chapiter is decorated with plant motives / bear grapes leaves/ which originate from Greek-Roman influence [10]. A cavity with a depth of 180 mm and a plan size of 11 cm on the sides is made inside, where probably the foot of the cross raised on it was placed (Fig. 13, 14). In the lower part of the pillar, at a height of 24.5 cm from the floor, there is a horizontal

cavity with a diameter of 10.5 cm which descends at an angle of 90° in the longitudinal axis of the pillar to the surface of the lower platform of the pillar (Fig. 15).

Fig. 14 Nest of chapiter of tetrahedral pillar

Research results

Collecting the details and pieces we can imagine how the pillar of tetrahedral colossus was (Fig. 15).

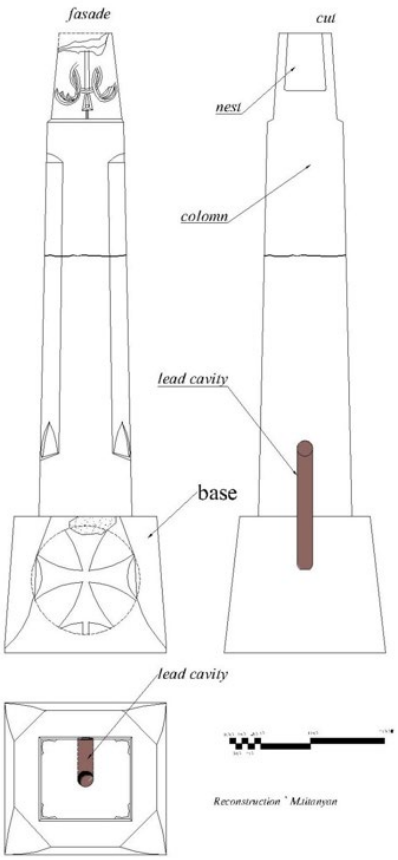

Fig. 15 General view of anchored tetrahedral pillar, reformation

As a result of excavations another stone detail was found which is very alike the chapiter of stone colossus described above (Fig. 16, 17).

Fig. 16 View of chapiter cavity

Fig. 17 External view of chapiter

It repeats the composition of found chapiter of tetrahedral colossum with its sizes, slopes and solutions (Fig.18).

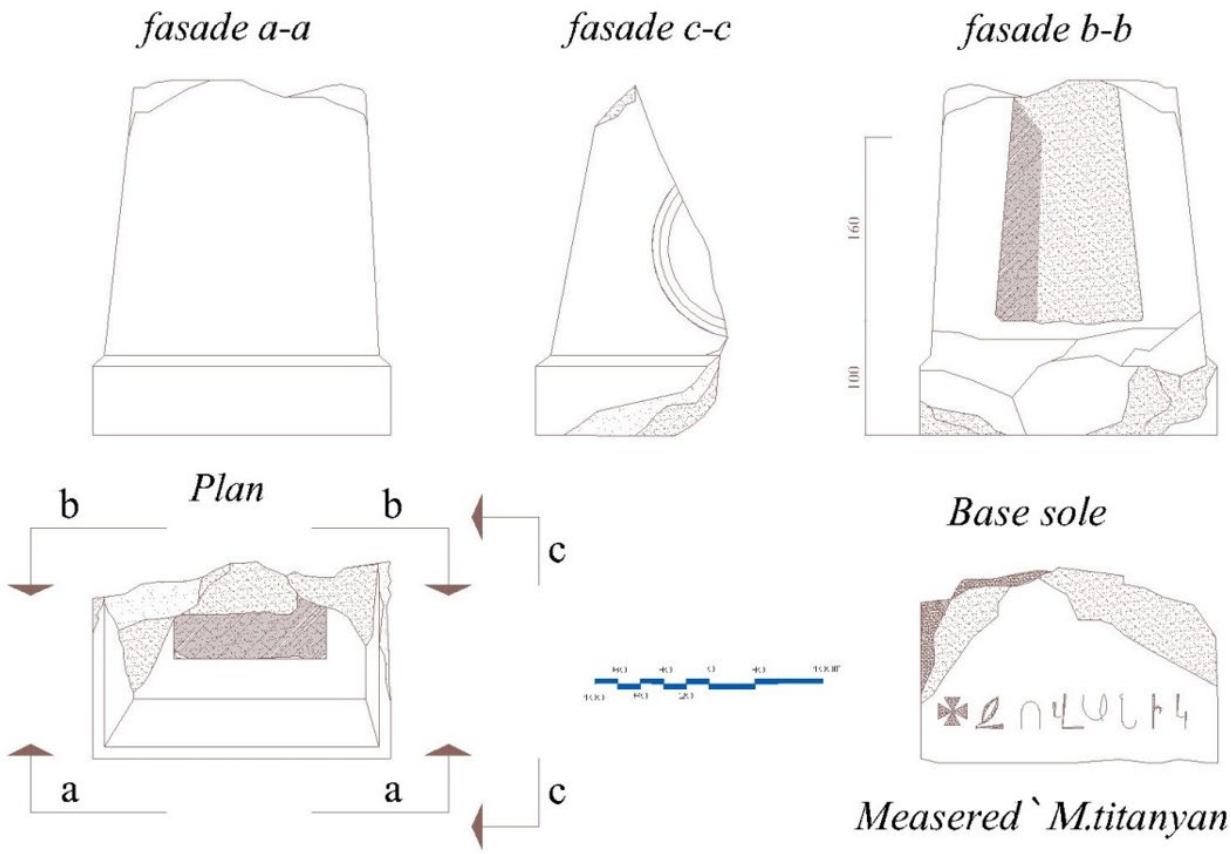

Fig. 18 Chapiter, topography (floor plans, facades, sections)

The fragment is broken by its central axis but the lower platform has mainly preserved its primary view (Fig.19). Probably it was sloved with the pillar not by joint piece but by a node[8].

Fig. 19 External views of chapiter

It is noticeable that on the sole of chapiter a cross of equal wings and name of Jovanik are engraved (probably Hovanik) (Fig. 20).

Fig. 20 Name engraved in the edge of the chapiter

As result of diggings in the ancient site other stone fragments were also found which should be considered as early medieval according to their composition, scale, art of stone recycling and engravings /crucifix (Fig. 21-22), wing cross stone fragments (Fig. 23-27), engraved chapiters (Fig. 28-29), wall stones and other fragments/.

Fig. 21, 22 Pieces of crucifixes

Fig. 23-27 Pieces of winged cross stones

Fig. 28, 29 Engraved chapiters

Conclusion

Cleaning works were carried out by the permission of the Ministry of Education, Science, Culture and Sports of the Republic of Artsakh in the sanctuary of Lusavorchi Sar in the vicinity of the village of Sos, Martuni region in 2019. In the area surrounded by walls of irregular stones, a stone anchor was found which was an object of worship, had an early medieval composition and belonged to the mentioned period according to historical traditions taking into consideration the crosses and stone carvings [11]. The studies of the material show that there were early medieval colossus in the sanctuary, which confirmed the Christian belonging of the place. According to the found material, the reconstructed monument probably had a four-part composition: the ground anchor, the anchor-table, the pillar and the winged cross (fragments of the latter were found on the spot).

The results of the further archeological and architectural studies planned in the sanctuary will provide an opportunity to give scientifically and accurate answers about the history of the region, the development of the early Christian school of architecture and cultural affiliation.

Gratitude

This research became possible by the sponsorship of ex-resident of Sos village, now living in Russia beneficent Yasha Dadayan. The interest arisen by the found material made possible the diggings in Lusavorchi Sar sanctuary which illuminated the unknown pages of early medieval history.

References

1. Petrosyan H., Yeranyan N. (2022) The monumental culture of Artsakh //Yerevan.- 231 p.
2. Petrosyan H., Kirakosyan L., Safaryan V. The discovery and first results of archaeological investigation of Tigranakert in Artsakh, 2005-2009 //Archaeology of Armenia in regional context, Proceedings of the International Conference dedicated to the 50 th Anniversary of the Institute of Archaeology and Ethnography Held on September 15-17, 2009 Yerevan, Yerevan 2012.- p. 223-235.

3. Mkrtchyan Sh. (1985) Historical - architectural monuments of Nagorna Karabakh //Yerevan, 1985.- 356 p.
4. Barkhudaryan M. (1895) Artsakh //Baku.- p. 461. https://artsakhlib.am/wp-content/uploads/2019/02/Barkhudaryan-Makar-Artsakh.pdf
5. Safaryan V. (2019) First results of archeological diggings of «Lusavorchi Sar» sanctuary of Sos village //Proceddings of Artsakh State University, 2019, Vol. 2, Stepanakert.- p. 36-44.
6. Petrosyan H. (2008) Cross stone, origin, functions, engraving, semasiology //Yerevan, 2008.- 406 p.
7. Mnatsakanyan S. (1982) Early medieval Armenian monuments //Yerevan, 1982.- 206 p.
8. Mnatsakanyan S. (1975) Early medieval Armenian monuments in Avan //Bulletin of social sciences, Yerevan, 1975, N 11.- p. 26-36.
9. Grigoryan G. (2012) Early medieval Armenian tetrahedral colossus //Yerevan, 2012.- 288 p.
10. Toromanyan T. Materials of Armenian architectural history (1942) //Yerevan, 1942, vol. 1, MCMXLII.- 397 p.
11. Harutyunyan V. (1992) History of Armenian architecture //Yerevan, 1992.- 632 p. http://lib.ysu.am/disciplines_bk/7e392bd93e078a20eda11b4c8f26e5f4.pdf

References

1. Պետրոսյան Հ., Երանյան Ն. (2022) Արցախի կոթողային հուշարձանները //Երեւան.- 231 էջ:
2. Petrosyan H. , Kirakosyan L. , Safaryan V. The discovery and first results of archaeological investigation of Tigranakert in Artsakh, 2005-2009 //Archaeology of Armenia in regional context, Proceedings of the International Conference dedicated to the 50 th Anniversary of the Institute of Archaeology and Ethnography Held on September 15-17, 2009 Yerevan, Yerevan 2012.- p. 223-235.
3. Մկրտչյան Շ. (1985) Լեռնային Ղարաբաղի պատմաճարտարապետական հուշարձանները //Երևան, 1985.- 356 էջ:
4. Բարխուդարյան Մ. (1895) Արցախ //Բաքու.- էջ 461: https://artsakhlib.am/wp-content/uploads/2019/02/Barkhudaryan-Makar-Artsakh.pdf
5. Սաֆարյան Վ. (2019) Սոս գյուղի «Լուսավորչի սար» ուխտատեղիի հնագիտական հետազոտությունների առաջին արդյունքները //Գիտական տեղեկագիր Արցախի պետական համալսարանի, 2019, պրակ 2, Ստեփանակերտ.- էջ 36-44:
6. Պետրոսյան Հ. (2008) Խաչքար: ծագումը, գործառույթը, պատկերագրությունը, իմաստաբանությունը //Երևան.- 406 էջ:
7. Մնացականյան Ս. (1982) Հայկական վաղ միջնադարյան մեմորիալ հուշարձանները //Երևան, 1982.- 206 էջ:
8. Мнацаканян С. Раннесредневековые мемориальные памятники в Аване (1975) //Вестник общественных наук, Ереван, 1975, N 11.- էջ 26-36:
9. Գրիգորյան Գ. (2012) Հայաստանի վաղ միջնադարյան քառանիստ կոթողները //Երևան, 2012.- 288 էջ:
10. Թորամանյան Թ. (1942) Նյութեր հայկական ճարտարապետության պատմության //Երևան, 1942, հատոր 1, MCMXLII.- 397 էջ:
11. Հարությունյան Վ. (1992) Հայկական ճարտարապետության պատմություն //Երևան.- 632 էջ: http://lib.ysu.am/disciplines_bk/7e392bd93e078a20eda11b4c8f26e5f4.pdf

ՆՈՐԱՀԱՅՏ ԿՈԹՈՂՆԵՐ ԱՐՑԱԽԻ ՍՈՍ ԳՅՈՒՂԻ «ԼՈՒՍԱՎՈՐՉԻ ՍԱՐ» ԿՈՉՎՈՂ ՍՐԲԱՏԵՂԻՈՒՑ

Տիտանյան Մ.Կ.
Շուշիի տեխնոլոգիական համալսարան

2019թ. Արցախի Սոս գյուղի շրջակայքում գտնվող «Լուսավորչի սար» կոչվող սրբատեղիում իրականացվել են ճարտարապետա-հնագիտական հետազոտություններ, որի արդյունքում ի հայտ են եկել վաղ միջնադարյան մեմորիալ հուշարձանների բեկորներ, ինչպես նաև այլ շինությունների հետքեր: Սրբավայրը հարուստ է բազմաթիվ բեկորներով, որոնք խոսում են այլ, դեռևս չհայտնաբերված կառույցների մասին: Ուսումնասիրության համար իրականացվել են նորահայտ նյութի չափագրական, փաստագրական, վերլուծական և համեմատական աշխատանքներ, դիտարկվել է սրբավայրի հետ կապված պատմական հիշատակությունները, ժամանակաշրջանը և շրջակա տարածքներում առկա նույնանման պատմա-ճարտարապետական նյութը: Բեկորների ուսումնասիրության և համադրության արդյունքում տրվել են կոթողային հուշարձանի վերակազմության գծագրեր: Սրբավայրի տարածքը դեռևս ամբողջությամբ ուսումնասիրված չէ և կարող է ի հայտ բերել նորանոր նյութեր և անակնկալներ: Անհրաժեշտ է ուսումնասիրել գտածո նյութերը, դասակարգել ըստ ժամանակի և տիպաբանության, ներկայացնել գիտական հանրությանը՝ լրացնելու համար Արցախի պաշտամունքային և կոթողային հուշարձանների վերաբերյալ առկա ուսումնասիրությունների շտեմարանը:

Բանալի բառեր. վաղ միջնադարյան կոթողներ, սրբավայր, թևավոր խաչ, քարակոթող, խաչակալ, կոթողի խոյակ:

НЕДАВНО ОБНАРУЖЕННЫЕ СТЕЛЫ ИЗ СВЯТИЛИЩА «ЛУСАВОРЧИ САР» АРЦАХСКОГО СЕЛА СОС

Титанян М.К.
Шушинский технологический университет

В 2019 г. в святилище «Лусаворичи сар» /«Гора Просветителя»/, расположенном в окрестностях арцахского села Сос, были проведены архитектурно-археологические исследования, в результате которых были обнаружены фрагменты раннесредневековых мемориальных памятников, а также следы других построек. Святыня богата многочисленными фрагментами, которые свидетельствуют о других, еще не обнаруженных сооружениях. С целью изучения недавно обнаруженного материала были проведены метрологические, документальные, аналитические и сопоставительные работы, рассмотрены исторические упоминания, связанные со святыней, период и аналогичный историко-архитектурный материал, имеющийся на прилегающих территориях. В результате изучения и совмещения фрагментов были даны чертежи реконструкции монументального памятника. Территория святилища еще

полностью не исследована и там могут быть обнаружены новые материалы и сюрпризы. Необходимо изучить найденные материалы, классифицировать их по времени и типологии, представить научному сообществу, чтобы пополнить сокровищницу исследований культовых и монументальных памятников Арцаха.

Ключевые слова: раннесредневековые памятники, святилище, крылатый крест, стела, подножие креста, капитель стелы.

Submitted on 21.12.2022
Sent for review on 22.12.2022
Guaranteed for printing on 28.04.2023

UDC - 330.341.42:338.001.36

THE CONCEPT OF ECONOMIC FREEDOM AND THE METHODOLOGY USED TO CALCULATE THE ECONOMIC FREEDOM INDEX

Ashot Kh. Markosyan
Political, Legal and Economic
Researches and Forecasting NGO
125, Armenakyan St. Yerevan
Shushi University of Technology
7 V.Vagharshyan, Stepanakert, RA
ashotmarkos@rambler.ru
ORCID iD: 0000-0002-5077-4253
Republic of Armenia

Elyanora N. Matevosyan
Political, Legal and Economic
Researches and Forecasting NGO
125, Armenakyan St. Yerevan
Institute of Economics after M. Kotanyan, NAS RA
15 Grigor Lusavorich St., Yerevan, RA
eleonora_matevosyan@ysu.am
ORCID iD: 0000-0002-9685-4363
Republic of Armenia

Meruzhan A. Markosyan
Political, Legal and Economic
Researches and Forecasting NGO
125, Armenakyan St. Yerevan
markosyan844@gmail.com
ORCID iD: 0000-0003-3608-0375
Republic of Armenia

Shabo A. Arakelyan
Shushi University of Technology
7 V.Vagharshyan, Stepanakert, RA
shabo.arakelyan@mail.ru
ORCID iD: 0000-0002-7305-8663
Republic of Artsakh

https://doi.org/10.56243/18294898-2023.1-17

Abstract

The index of economic freedom is one of the key features of the system of macroeconomic indicators used by nations with market economies. It should be noted that this

index summarizes the key findings regarding the socioeconomic development of either this or that nation, as well as the success or failure of progress.

The Republic of Armenia ranks 11th out of 165 countries in the "World Economic Freedom 2022 Annual Report," which can be regarded as an appreciable achievement given that it accurately reflects the overall evaluation of socio-economic reforms made by the government of the country in recent years.

Key words: economic freedom, economic freedom components, government size, legal system, property rights, freedom of international trade, tariff, regulations.

Introduction

Before considering the content of economic freedom and its essence, let's look at certain definitions of liberalism and economic freedom. Thus, if we are to define liberalism in one sentence, it can be formulated as follows: a person is a higher value than the state. This provision is also defined by the Constitution of the Republic of Armenia, Article 3 of which directly stipulates: "In the Republic of Armenia, a person is the highest value" [1]. It follows from the nature of the idea of freedom that final truths are not expressed or fixed here. There is not, and perhaps there will never be, such an end-to-end definition of liberalism that will be common to all societies. The reason for this is not only that new questions constantly arise in politics that require new liberal answers. The reason above all is that liberalism was not "invented" in one fell swoop, but is a summation of the minds of many individuals. Each of them contributed in their own way to the development of the idea of liberalism.

For example, the Scottish philosopher David Hume in one of his works (the Political Discourses, 1752) wrote about his political thinking on the assumption that freedom and justice are only the result of cultural development, which receives its dynamics in the individual's pursuit of utility. This position was developed in the works of Ludwig von Mises, an Austran School economist, who valued only the individual and his ability to make economic calculations, completely rejecting the idea of pre-state natural law.

There are different paths to the same goal. That goal is an open and liberal society based on the principles of individual freedom and the rule of law and free market economy. Discussing the foundations of this development is always an urgent problem. Discussing the foundations of this development is always an urgent problem. As noted by Friedrich August von Hayek, the principle of freedom for an individual is the principle of freedom. It is the only real power of the future, it remains as true today as it was. in the 19th and 20th centuries.

Adam Smith, the founder of classical economics, argued that individuals acting solely in their own interests contribute to the greatest increase in the total wealth of a country. In achieving these goals, the role of the state should be to allow private economic activity and create a legal apparatus to ensure such activity.

This view was further developed by proponents of the new classical direction, who included in the discussion field not only the freedom of production and accumulation, but also the freedom of choice in consumption. The model of perfect competition provided additional theoretical evidence that free competition and unrestricted disclosure of consumer preferences maximizes society's economic welfare.

Ludwig von Mises saw every intervention of the state in economic life as a violation of the normal process of economic development. The scientific refutation of socialism was based

on the fact that the latter is incapable of rational calculation of costs. At a time when the ideas of liberalism were almost completely forgotten in German-speaking countries, he made one of the rare bold attempts to justify them with his book "Liberalism" (1927) [2].

Friedrich August von Hayek about the changes in the concept of "freedom" says "It is necessary to pay particular attention to the imperceptible change in the meaning of the word "liberty" so that our judgments sound credible. For the great apostles of political liberty, the word meant the freedom of man from the violence and wilfulness of other men, the liberation from the shackles that left the individual no choice but to submit to those in power. The new, promised freedom is freedom from actions dictated by circumstances, which undoubtedly limit the choice of each of us, though more for some and less for others. In order for a person to become truly free, it is necessary to overcome the "physical dictate", to weaken the "pressure of the economic system".

In this sense, freedom can be interpreted as another name for power or wealth. Such a confusion of freedom and power occurs frequently, but it is too complex a problem for us to discuss in detail within the scope of this work. It is noteworthy that one of the most obvious advocates of confusing the mentioned concepts is the American liberal philosopher John Dewey, who writes: “Freedom is the real power to do certain things. Therefore, the demand for freedom is also a demand for power" [3].

It is often stated that political freedom is impossible without economic freedom. This is a true statement, but not in the sense that the proponents of planning put it into the statement. Economic freedom, which is a necessary precondition for any other manifestation of freedom, cannot at the same time be freedom from all economic worries. Meanwhile, socialists promise this kind of freedom, often forgetting to add that they will free people from freedom of choice altogether. Economic freedom is the freedom of any activity, which includes the right to choose and the risk and responsibility associated with that right [4].

As is well known, the demand for freedom of trade is the demand for unlimited division of labor among the inhabitants of different states. Since the division of labor, this main source of economic freedom, is particularly large when we are dealing with nations of different productive capacities, it can be assumed that the whole world will understand the enormous advantage of the division of labor among the inhabitants of different climates and places, because that in consequence of the peculiarities of their manners, habits, and natural inclinations, they have very different productivity. It can be assumed that the economic factor, which unites peoples separated by state borders, should show everyone that the economic community should not be confused with the state community. It should show that if the only task of the state is to protect property and person and to oppose violence within its borders, then the economic community should take under the protection of the state all those who, regardless of the country of their residence, are capable of participating in the growth of the needs of the national economy [5, 6].

Conflict Setting

After the collapse of the former Soviet Union, society had a great "deficit" of justice and freedom, which was due to the drastic changes in public life and economic relations, for which perhaps our society was not ready. In the scope of our research, the problem was firstly to identify the priorities in the value ranking of the population of Armenia and Artsakh, then to present the methodological foundations of understanding the term "economic freedom", as

well as to make comparisons between certain countries.

Research Results

The importance of the ideas of "independence" and "freedom" is also evidenced by the results of the survey, which was conducted between September 25 and November 20, 2019 and in which 667 citizens of the Republic of Armenia and the Republic of Artsakh, mostly students of universities, participated. and professors. One of the purposes of the survey was, in particular, to get an idea of the basis of the formation of the society's value system and the role of freedom and justice in that process. Thus, the representatives of the universities of Armenia and Azerbaijan ranked the versions of the question "Which of the mentioned values are the most important?" in the first important position in the following proportion: 36% of all participants who mentioned the most important value chose the answer "justice", 22% - " freedom". Other options were chosen as the most important value by 8 percent or less of the participants, namely, "patriotism" and "solidarity" options were considered the most important value by 8 per cent of the respondents each, "kindness to people", "solidarity", "self-restraint and sacrifice" - 7 per cent of the respondents, and "family traditions" are considered the most important value by 5 per cent of the respondents [2] (Fig. 1).

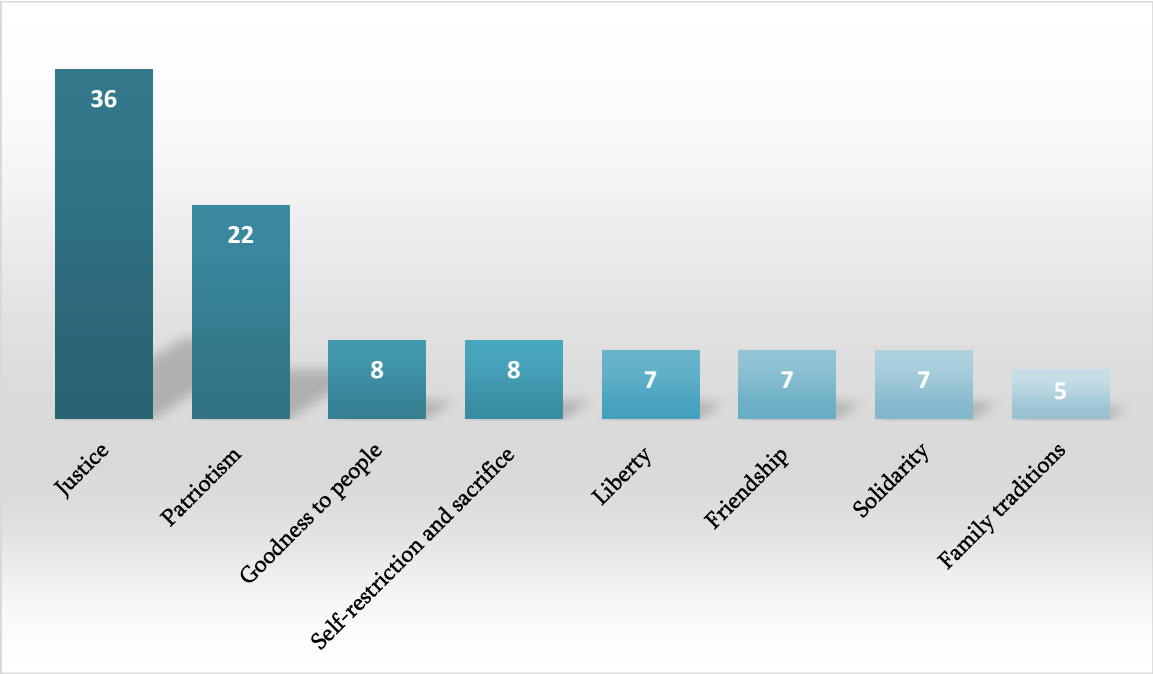

Fig. 1 The relative weights of the options given primary importance to the question "Which of the listed values do you consider the most important?"

It should be noted that among the tools for the implementation of inter-country (international) combinations, various types of coefficients are used, which have been especially widely used in the last 20-30 years.

Index of Economic Freedom. According to the data of 2020, Armenia was the 11th among the countries and territories included in the 2022 Annual Report of World Economic Freedom. It was published by the non-governmental organization "Political, Legal and Economic Research and Forecasting", a co-author of the Economic Freedom Report, a full

member of the Economic Freedom Network of the Republic of Armenia, in cooperation with the Fraser Institute of Canada [7].

According to the data of 2019, Armenia was 17th in the ranking table. The point is that when individual countries raise taxes and strengthen market regulation, people become less economically free, which means slower economic growth and less investment.

Tab. 1 shows the list of 15 countries with the best economic freedom rating with the economic freedom index.

Table 1

List of the 15 countries with the best economic freedom ranking included in the 2022 World Report

World Ranking	Country	Points (out of 10)
1	Hong Kong	8.59
2	Singapore	8.48
3	Switzerland	8.37
4	New Zealand	8.27
5	Denmark	8.09
6	Australia	8.04
7	USA	7.97
8	Estonia	7.95
9	Mauritania	7.88
10	Ireland	7.86
11	Armenia	7.84
12	Japan	7.82
13	Lithuania	7.82
14	Canada	7.81
15	Georgia	7.78

The above Table was compiled by Economic Freedom of the World - According to 2022 Annual Report, page 8, Reference to the electronic resource: www.fraserinstitute.org/economic-freedom.

Hong Kong and Singapore once again lead the economic freedom index, continuing to hold their respective top spots, while Switzerland, New Zealand, Denmark, Australia, the United States, Estonia, Mauritius and Ireland, Armenia, Japan, Lithuania, Canada and Georgia are tied for the top spot. fifteen countries.

The report, which has been published since 1996, measures economic freedom - the ability of individuals to make their own economic decisions - by analyzing a range of indicators, including regulation, size of government, property rights, government spending and taxation. The 2022 annual report, based on 2020 data (the most recent available), also reflects the impact of restrictions related to the COVID-19 pandemic.

The 15 lowest ranked countries are: Ethiopia, Chad, Iraq, Lebanon, Central African Republic, Democratic Republic of Congo, Algeria, Republic of Congo, Iran, Libya, Argentina, Syrian Arab Republic, Zimbabwe, Sudan and Venezuela (Tab. 2). Due to a lack of data, dictatorial countries such as North Korea and Cuba were not ranked in the report.

Other major country rankings include Japan (12th), Canada (14th), Germany (24th), Italy (43rd), France (54th), Mexico (65th), India (90th), Russia (94th), Brazil (114th) and China (116th).

From the given data, it becomes obvious that countries with large economies are significantly inferior to countries with smaller sizes in terms of economic freedom. And this

means that in countries with small sizes (Armenia is included in the list of such countries) the achievement of economic freedom is much easier and in a short period of time it is possible to achieve high indicators of economic freedom.

Table 2

List of the 15 countries with the worst data in the 2022 World Economic Freedom Report

World Ranking	Country	Points (out of 10)
1	Ethiopia	5.58
2	Chad	5.55
3	Iraq	5.51
4	Lebanon	5.45
5	Central African Republic	5.40
6	Democratic Republic of Congo	5.36
7	Algeria	5.12
8	Republic of the Congo	5.08
9	Islamic Republic of Iran	4.96
10	Libya	4.95
11	Argentina	4.87
12	Syrian Arab Republic	4.63
13	Zimbabwe	4.48
14	Sudan	4.21
15	Venezuela	3.32

The above Table was compiled by Economic Freedom of the World - According to 2022 Annual Report page 9, Reference to the electronic resource: www.fraserinstitute.org/economic-freedom.

According to research in top peer-reviewed academic journals, people living in countries with high levels of economic freedom have higher standards of living, more political and civil liberties, and live longer lives.

For example, in countries in the top quartile of economic freedom, the average GDP per capita in 2020 was 48,251 USD, and in countries in the bottom quartile, it was 6,542 USD [7].

The poverty rate is lower for the population of countries in the top quartile, where extreme poverty (incomes of US$1.90 per day) was recorded at 2.02 percent of the total population). In the countries included in the lower quarter, it was 31.45 percent of the entire population [7].

And finally, life expectancy in the top quartile of countries is 80.4 years, compared to 66.0 years in the bottom quartile.

The Fraser Institute produces the annual World Economic Freedom Report in partnership with the Economic Freedom Network, a group of independent research and education institutes that brings together organizations from around 100 countries and territories. It is the world's primary measure of economic freedom, which measures and ranks countries according to five areas: size of government, legal structure and security of property rights, access to "sound" money, freedom of international trade, and regulation of credit, labor and business. This year's report was prepared by Florida State University professor James Gwartney, Robert Lawson and Ryan Murphy from Southern Methodist University, and Joshua Hall from West Virginia University (they are all world-class economists, renowned scientists).

The main components of economic freedom of Armenia are evaluated (on a scale of 1 to 10 points, where a higher value indicates a higher level of economic freedom) as follows:

- The "Government size" component improved compared to last year's assessment, from 7.77 to 7.98;
- Legal system and property rights: from 6.25 to 6.24;
- Availability of "Sound" money increased from 9.52 to 9.55;
- Freedom of international trade decreased from 8.53 to 7.69;
- The overall credit, labor and business regulation rating decreased from 7.82 to 7.76.

Thus, the improvement of the index of economic freedom in the Republic of Armenia in 2020 compared to 2019 was mainly due to the improvement of two components of the calculation of the index of economic freedom: the size of the government (in other words, the state's expenses) and the indicators of access to money. The significant deterioration of the index of international trade freedom can be considered justified, taking into account the general and significant decline in commercial transactions, movement of goods due to the restrictions of the COVID-19 pandemic in 2020, and the slight deterioration of the indicators of the quality of regulations in RA due to both the epidemic and the war. The legal system and the set of indicators characterizing the realization of property rights have remained almost unchanged.

It should be noted that the index of economic freedom of countries is a synthetic, macroeconomic indicator, which is a system of evaluating indicators and instruments related to various aspects of the economy and management spheres. In essence, the index of economic freedom represents a complete picture of the 5 most important structural sectors of the economy, according to which the completeness of these indicators best characterizes the degree of economic freedom. Bearing in mind that the concepts of the economic freedom index both in the general society and in various professional platforms are not complete and complete, we consider it appropriate to present the economic freedom and the set of indicators and components included in that system (Tab. 3).

Table 3

Components of economic freedom index

100	**Summary rating data**
102	**1. Size of Government**
103	A. Government consumption
105	B. Transfers and Subsidies
107	C. Public investment
108	D. The maximum marginal tax rate
109	(i) Maximum marginal rate of income tax
110	(ii) Maximum marginal rate of income tax and insurance contributions
111	E. State ownership of assets
200	**2. Legal system and property rights**
201	A. Judicial independence
202	B. Impartial Courts
203	C. Protection of Proprietary Rights
204	D. Military intervention in the rule of law and politics
205	E. Integrity of the Legal System
206	F. Lawful Enforcement of Contracts
207	G. Restrictions Governing the Sale of Real Estate
208	H. Reliability of the Police
210	Refinement of gender rights
300	**3. "Sound" money**
301	A. Growth in money supply

303	B. Standard deviation of inflation
305	C. Inflation: most recent year
307	D. Freedom to hold foreign currency bank accounts
400	**4. Freedom of international trade**
401	**A. Tariffs**
402	(i) Revenues from trade taxes (in % of trade)
404	(ii) Average rate of tariff
406	(iii) Standard deviation of tariff rates
408	**B. Regulatory Restrictions on Trade**
409	(i) Non-tariff restraints on trade
410	(ii) Import and export compliance costs
412	**C. Black Market Exchange Rates**
413	**D. Control of the Movement of Capital and People**
414	(i) Financial openness
415	(ii) Capital controls
416	(iii) Freedom of Visits by Foreigners
500	**5. Regulations**
501	**A. Credit Market Regulations**
502	(i) Ownership of Banks
504	(ii) Loans to the private sector
505	(iii) Interest rate controls (negative real interest rates)
507	**B. Labor Market Regulations**
508	(i) Employment regulations and minimum wages
509	(ii) Hiring and Dismissal Regulations
510	(iii) Centralized collective agreements
511	(iv) Regulation of Hours of Operation
512	(v) Mandatory Employee Termination Expenses
513	(vi) Conscription
514	**C. Business Regulations**
516	(i) Administrative Requirements
517	(ii) Regulatory Burden
518	(iii) Availability to start a new business
519	(iv) Extra payments/bribery/favouritism
520	(v) Licensing Restrictions
521	(vi) Tax Compliance Costs

Source - Economic Freedom of the World: 2022 Annual Report:

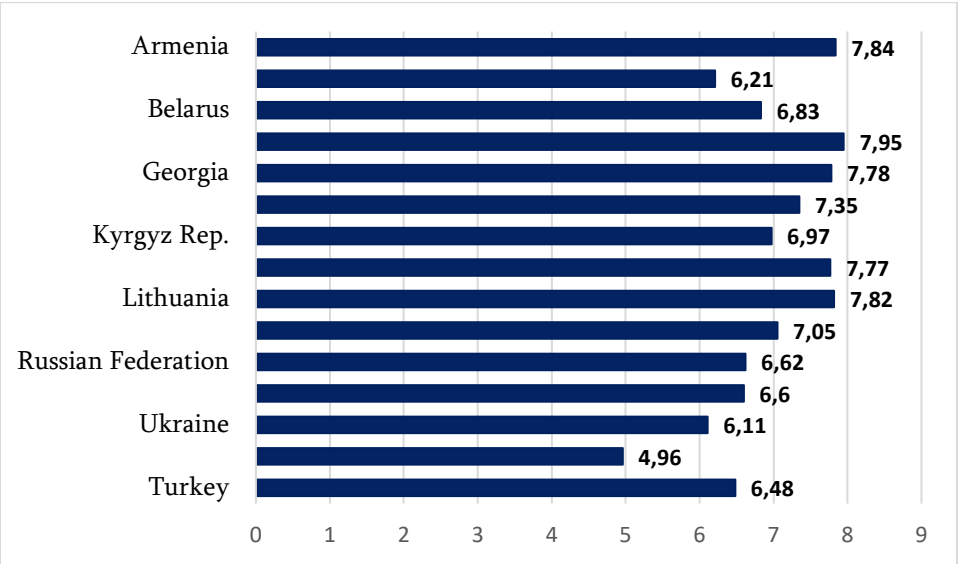

Fig. 2 Brief rating data of the economic freedom index of the Republics of the former Soviet Union, Iran, and Turkey in 2020 (compiled based on the data of the Economic Freedom of the World 2022 Annual Report)

World Economic Freedom measures how countries' policies and institutions support economic freedom. This year's edition ranks 165 countries and territories. The report also updates the data reflected in previous years' reports, in cases where the data has been revised.

For comparison, Fig. 2 shows the economic freedom statistics for the Republic of Armenia, the CIS, the Islamic Republic of Iran, and Turkey, which are included in the 2022 report, but refer to the results of 2020 (these are the most up-to-date data currently available).

Fig. 3 shows the estimates of individual components forming the coefficients of economic freedom of the same countries. Moreover, the data refer to 2020 and represent the results recorded in that year, although they are included in the 2022 report, so they are the most current data currently available.

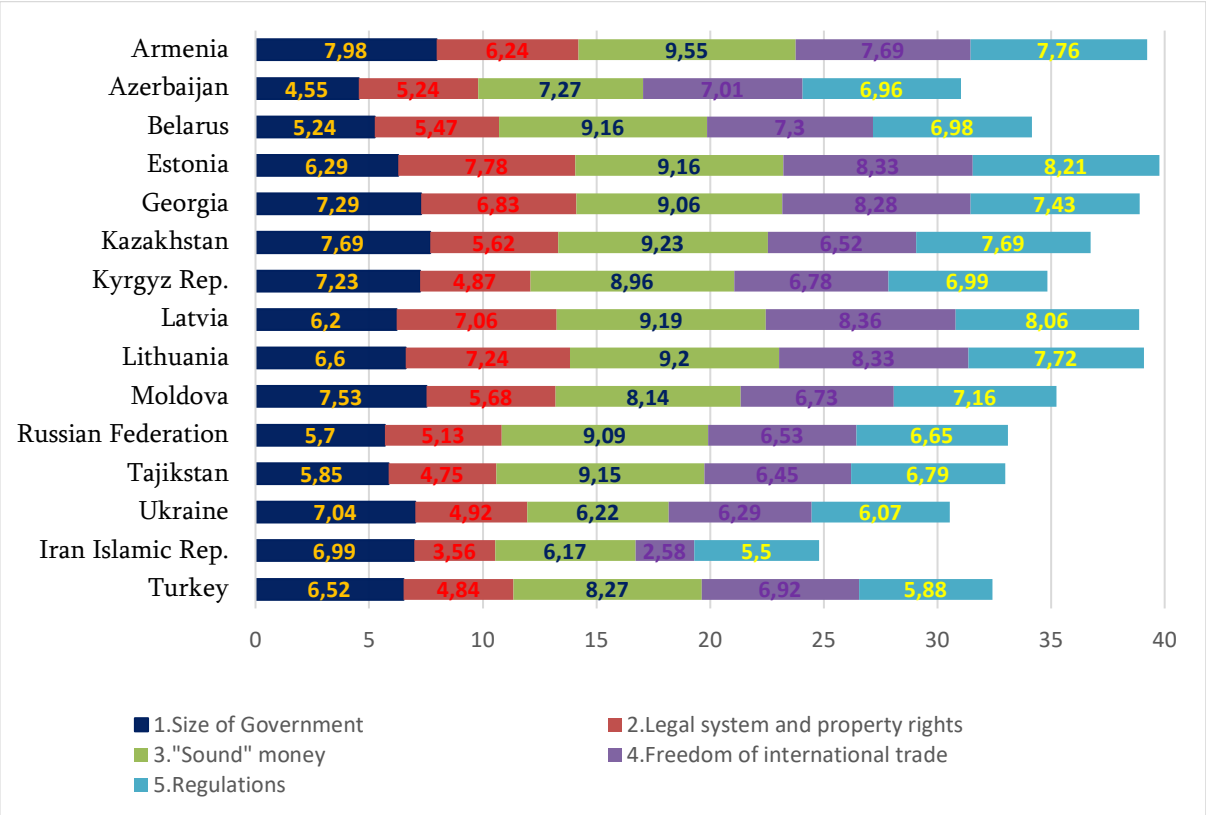

Fig. 3 Estimation of separate components forming the economic freedom index of the Republics of the former Soviet Union, Iran, and Turkey in 2020 (compiled based on the data of the Economic Freedom of the World 2022 Annual Report)

To find out Fig. 3 the rate of change in the coefficient of economic freedom in the countries listed in previous figure, as well as the influence of individual components of this coefficient on the said change, 2000-2020. the aggregated (enlarged) indicators of the economic freedom index are given.

Tab. 4 shows the full indicators of economic freedom of the Republic of Armenia, the Republic of Georgia and the Republic of Azerbaijan, as well as Iran and Turkey and the member states of the Eurasian Economic Union.

From the data of Table 4, it can be seen that in 2000, the highest value of the index of economic freedom was recorded in Iran (34.36), in 2005 - in Georgia (46.38), in 2010 - in Armenia (45.99), in 2015, 2016, 2017, 2018, 2019 - in Georgia (48.97, 48.98, 49.11, 49.2, 48.97) and in 2020 in Armenia (47.06). Let's note an important circumstance that in 2020, the

Republic of Armenia operated under exceptionally difficult conditions. We are referring to the 44-day Armenian-Azerbaijani war of 2020 and the continued impact of the Covid-19 epidemic on the economy.

Table 4

Complete indicators of economic freedom of the Republic of Armenia, the Republic of Georgia and the Republic of Azerbaijan, as well as Iran and Turkey and member states of the Eurasian Economic Union

Country	2000	2005	2010	2015	2016	2017	2018	2019	2020
Armenia									
Summary rating data		7.58	7.67	7.73	7.67	7.69	7.95	7.98	7.84
Size of government	8.12	8.73	8.59	7.87	7.59	7.5	7.97	7.77	7.98
The legal system and property rights	5	5.59	5.46	5.57	5.63	5.7	6.13	6.25	6.24
“Sound” money		9.36	9	9.21	9.32	9.37	9.43	9.52	9.55
Freedom of international trade		7.35	7.99	8.61	8.43	8.47	8.46	8.53	7.69
Regulations		6.9	7.28	7.38	7.38	7.39	7.74	7.82	7.76
Total	13.12	36.78	45.99	38.5	38.43	30.93	39.71	32.12	39.22
Azerbaijan									
Summary rating data		6.03	5.82	6.29	6.46	6.35	6.51	6.43	6.21
Size of government	7.4	6.58	4.44	5.34	5.53	5.46	5.1	5.01	4.55
The legal system and property rights	4.78	4.93	4.93	4.99	5.27	5.29	5.21	5.24	5.24
“Sound” money		7.03	6.44	7.24	7.65	7	7.55	7.29	7.27
Freedom of international trade		5.5	6.32	7.03	7.09	7.23	7.32	7.24	7.01
Regulations	4.3	6.09	6.98	6.88	6.73	6.77	7.36	7.37	6.96
Total	16.48	36.16	34.93	37.77	38.73	38.1	39.05	38.58	37.24
Georgia									
Summary rating data	6.86	7.73	7.6	8.16	8.16	8.19	8.2	8.16	7.78
Size of government	8.51	7.77	6.89	8.06	8.08	7.97	7.8	7.59	7.29
The legal system and property rights	5.41	6	6.32	6.69	6.63	6.62	6.65	6.72	6.83
“Sound” money		8.6	8.57	8.94	9.03	8.92	9.3	9.22	9.06
Freedom of international trade	7.91	8.33	8.25	8.97	8.86	9.07	9.05	9.12	8.28
Regulations	5.64	7.95	7.95	8.15	8.22	8.34	8.2	8.16	7.43
Total	34.33	46.38	45.58	48.97	48.98	49.11	49.2	48.97	46.67
Belarus									
Summary rating data					6.08	6.47	6.34	6.48	6.83
Size of government	6.83	6.79	6.79	6.79	6.31	6.4	6.44	5.39	5.24
The legal system and property rights	5.83	6.29	6.26	5.66	5.7	5.69	5.65	5.66	5.47
“Sound” money					4.96	7.13	7.5	9.01	9.16
Freedom of international trade					7.21	6.12	6.06	6.18	7.3
Regulations					6.21	7	6.06	6.17	6.98
Total	12.66	13.08	13.05	12.45	36.47	38.81	38.05	38.89	40.98
Kazakhstan									
Summary rating data		6.6	6.79	7.2	7.09	7.28	7.42	7.6	7.35
Size of government	8.07	8.08	7.69	7.82	7.85	7.88	8	7.96	7.69
The legal system and property rights	5.01	5.02	5.13	5.66	5.49	5.5	5.57	5.58	5.62
“Sound” money		6.7	8.38	8.69	8.33	8.83	8.96	9.28	9.23
Freedom of international trade		5.74	5.26	6.09	6.24	6.76	6.61	7.2	6.52
Regulations		7.46	7.5	7.77	7.52	7.45	7.97	7.96	7.69

Country	2000	2005	2010	2015	2016	2017	2018	2019	2020
Total	13.08	39.6	40.75	43.23	42.52	43.7	44.53	45.58	44.1
Russian Federation									
Summary rating data	5.08	6.02	6.4	6.59	6.71	6.81	6.85	6.83	6.62
Size of government	6.5	6.53	6.54	6.33	5.94	6.26	6.29	6.06	5.7
The legal system and property rights	4.78	5	4.95	5.01	5.08	5.15	5.15	5.14	5.13
“Sound” money	3.11	6.63	8.24	8.26	9	9.27	9.3	9.31	9.09
Freedom of international trade	5.97	5.75	5.9	6.87	7.04	7.1	6.93	6.82	6.53
Regulations	5.02	6.19	6.38	6.46	6.48	6.28	6.61	6.83	6.65
Total	30.46	36.12	38.41	39.52	40.25	40.87	41.13	40.99	39.72
Islamic Republic of Iran									
Summary rating data	5.73	6.07	5.75	5.48	5.58	5.74	5.19	5.02	4.96
Size of government	5.35	6.14	6.33	6.32	5.97	5.91	6.27	6.65	6.99
The legal system and property rights	3.97	3.88	3.82	3.79	3.84	3.78	3.62	3.6	3.56
“Sound” money	8.3	8.61	8.61	7.58	7.83	7.79	7.46	5.94	6.17
Freedom of international trade	5.73	5.99	5.17	4.52	4.51	5.65	3.09	3.41	2.58
Regulations	5.28	5.74	4.81	5.17	5.76	5.55	5.5	5.5	5.5
Total	34.36	36.43	34.49	32.86	33.49	34.42	31.13	30.12	29.76
Turkey									
Summary rating data	5.61	6.35	6.97	6.99	6.97	6.7	6.66	6.49	6.48
Size of government	7.22	8.19	7.28	7.31	7.23	7.26	7.03	6.53	6.52
The legal system and property rights	5.05	5.97	5.22	5	4.94	4.72	4.77	4.85	4.84
“Sound” money	3.57	4.94	8.8	9.08	9.02	8.84	8.35	8.26	8.27
Freedom of international trade	6.62	6.97	7.24	7.12	7.1	7.16	7.17	6.98	6.92
Regulations	5.6	5.71	6.32	6.44	6.56	5.51	5.98	5.82	5.88
Total	33.67	38.13	41.83	41.94	41.82	40.19	39.96	38.93	38.91
Kyrgyzstan									
Summary rating data		6.76	6.78	6.98	7.17	7.16	7.16	7.17	6.97
Size of government		7.24	7.66	7.48	7.42	7.48	7.38	7.33	7.23
The legal system and property rights	4.12	4.19	4.33	4.8	4.86	4.86	4.83	4.91	4.87
“Sound” money		8.71	8.24	8.43	9.34	9.27	9.31	9.44	8.96
Freedom of international trade		6.78	6.75	7.27	7.39	7.42	7.19	7.12	6.78
Regulations		6.89	6.91	6.9	6.81	6.74	7.07	7.03	6.99
Total	4.12	40.57	40.67	41.86	42.99	42.93	42.94	43.00	41.8

The above Table was compiled by the World Economic Freedom - According to 2022 Annual Report page 9.

In addition to the above-mentioned methodology, many other approaches are used in the evaluation and calculation of the coefficient of economic freedom. among them, the 2022 Index of Economic Freedom studies are the most popular. However, when the coefficients of economic freedom calculated by different methodologies are compared, this or that country appears in different places in different studies. Thus, for example, according to the methodology of the 2022 Index of Economic Freedom, the economic freedom index (EFI) is compiled according to 12 criteria, which the authors call pillars. They show tax burden, government spending, corruption, efficiency of justice, protection of property rights, business, labor, monetary freedom, market openness - freedom of trade, protection of investors, etc. In other words, the methodologies of calculating and evaluating the coefficient of economic

freedom by different centers and authors are fundamentally incompatible and incommensurate, therefore, making such comparisons is fundamentally unacceptable. In addition, another error in the methodological nature of the organizations dealing with the evaluation of freedoms is that very often their authors do not distinguish economic freedom coefficients from freedoms in general, since the latter includes political, cultural and other types of freedoms from the economic freedom coefficient.

Conclusion

As a conclusion, let us note that the index of economic freedom, both at the level of the whole world and during cooperation between regional and individual states, has become a priority compared to other macroeconomic indicators. The best example of what has been said is the Republic of Armenia, whose high index of economic freedom (according to the observed methodology) had its impact on the socio-economic development of the country. As a result of the Russian-Ukrainian war, especially Russian and Ukrainian capital inflowed large volumes into the RA economy. The high index of economic freedom was also one of the main motivations for the investors of the mentioned countries to invest in RA.

References

1. Constitution of the Republic of Armenia, entered into force on 22.12.2015. See: Armenian legal information system (ARLIS), Internet source: https://www.arlis.am/documentview.aspx?docID=102510
2. Markosyan A., Khachaturyan V., Matevosyan E. (2020) Economics of the modern state. The toolkit of state regulation of the economy //Yerevan, «Antares», 2020.- 628 p.
3. Friedrich August von Hayek «The Road to Slavery» //M: New publishing house, 2005.- 264 p.
4. Daron Acemoglu and James A. Robinson «The narrow corridor: States, Societies, and the Fate of Liberty» //Penguin Press, 2019.- 576 p.
5. Independence of the Republic of Armenia and liberal reforms, Friedrich Naumann Foundation for Freedom: - Yerevan, «Antares», 2021.- 360 p.
6. Vahagn Khachaturyan «The road to freedom», in the book «Independence of the Republic of Armenia and liberal reforms» //Yerevan, «Antares», 2021.- p.177-185.
7. Economic Freedom of the World: 2022 Annual Report. Publisher: FRASER Institute. Internet source: https://www.fraserinstitute.org/studies/economic-freedom-of-the-world-2022-annual-report

References

1. Հայաստանի Հանրապետության Սահմանադրություն, ուժի մեջ է մտել 2015թ. դեկտեմբերի 22-ից //Հայաստանի իրավական տեղեկատվական համակարգ (ARLIS), հղումը՝ https://www.arlis.am/documentview.aspx?docID=102510
2. Մարկոսյան Ա., Խաչատուրյան Վ., Մաթևոսյան Է. (2020) Ժամանակակից պետության տնտեսագիտություն. տնտեսության պետական կարգավորման գործիքակազմը //Երևան, «Անտարես», 2020.- 628 p.
3. Friedrich August von Hayek «The Road to Slavery» //M: New publishing house, 2005.- 264 p.
4. Daron Acemoglu and James A. Robinson «The narrow corridor: States, Societies, and the Fate of Liberty» //Penguin Press, 2019.- 576 p.

5. Independence of the Republic of Armenia and liberal reforms, Friedrich Naumann Foundation for Freedom: - Yerevan, «Antares», 2021.- 360 p.
6. Vahagn Khachaturyan «The road to freedom», in the book «Independence of the Republic of Armenia and liberal reforms» //Yerevan, «Antares», 2021.- p.177-185.
7. Economic Freedom of the World: 2022 Annual Report. Publisher: FRASER Institute. Internet source: https://www.fraserinstitute.org/studies/economic-freedom-of-the-world-2022-annual-report

ՏՆՏԵՍԱԿԱՆ ԱԶԱՏՈՒԹՅԱՆ ԸՆԿԱԼՈՒՄԸ ԵՎ ՏՆՏԵՍԱԿԱՆ ԱԶԱՏՈՒԹՅԱՆ ՀԱՄԱԹՎԻ ՀԱՇՎԱՐԿՄԱՆ ՄԵԹՈԴԱԲԱՆԱԿԱՆ ՀԻՄՔԵՐԸ

Մարկոսյան Ա.Խ.[1, 2], Մաթևոսյան Է.Ն.[1, 3], Մարկոսյան Մ.Ա.[1], Առաքելյան Շ.Ա.[2]
[1] Քաղաքագիտական, իրավագիտական, տնտեսագիտական հետազոտությունների և կանխատեսումների ՀԿ
[2] Շուշիի տեխնոլոգիական համալսարան
[3] ՀՀ ԳԱԱ Մ. Քոթանյանի անվան տնտեսագիտության ինստիտուտ

Շուկայական տնտեսություն ունեցող երկրի հիմնական ամփոփ ցուցիչների համակարգում առանձնահատուկ տեղ և կարևորություն ունի տնտեսական ազատության համաթիվը: Այդ ցուցանիշը շուրջ 30 տարի գնահատվում և հաշվարկվում է ամենատարբեր կազմակերպությունների և հետազոտական կենտրոնների կողմից: Այն առավել ամբողջական և լիարժեք է ներկայացնում երկրի տնտեսական զարգացման աստիճանը: Այդ ցուցանիշն իր մեջ ընդգրկում է, ըստ էության, պետության տնտեսական քաղաքականության և կառավարման ամենակարևոր գործիքակազմը, ինչպես նաև չափելի ու մյուս երկրների ցուցաիշների հետ համադրելի արդյունքներ է տրամադրում:

Հեղինակների կողմից իրականացվել է տնտեսական ազատության համաթվի տարբեր մեթոդաբանությունների համադրում, դրանց ուժեղ և թույլ կողմերի համեմատություն, ինչը հնարավորություն է տվել բացահայտելու այդ մեթոդաբանություններից ամենահուսալին:

Բանալի բառեր. տնտեսական ազատություն, տնտեսական ազատության բաղադրիչներ, կառավարության չափը, իրավական համակարգ, սեփականության իրավունք, միջազգային առևտրի ազատություն, սակագին, կարգավորում:

ВОСПРИЯТИЕ ЭКОНОМИЧЕСКОЙ СВОБОДЫ И МЕТОДОЛОГИЧЕСКИЕ ОСНОВЫ РАСЧЕТА ИНДЕКСА ЭКОНОМИЧЕСКОЙ СВОБОДЫ

Маркосян А.Х.[1, 2], Матевосян Э.Н.[1, 3], Маркосян М.А. [1], Аракелян Ш.А.[2]
[1] ОО по политологическим, правовым, экономическим исследованиям и прогнозированию
[2]Шушинский технологический университет
[3]Институт экономики им. М.Котаняна НАН РА

Индекс экономической свободы занимает особое место в системе основных сводных показателей стран с рыночной экономикой и имеет центральное значение

для оценки реформ. Этот показатель рассчитывается различными организациями и исследовательскими центрами уже около 30 лет. Он наиболее полно и всесторонне отражает степень экономического развития страны. Этот показатель включает, по сути, важнейший инструментарий государственной экономической политики и управления, а также позволяет измерять и сопоставлять соответствующие показателями других стран.

Авторами проведено сравнение различных методик расчета индекса экономической свободы, сопоставление их сильных и слабых сторон, что позволило выявить наиболее достоверную из применяемых методик.

Ключевые слпва: экономическая свобода, составляющие экономической свободы, размер правительства, правовая система, право собственности, свобода международной торговли, тарифы, регулирование.

Submitted on 16.02.2023
Sent for review on 17.02.2023
Guaranteed for printing on 28.04.2023

UDC - 338.27:608.1:01.894.2:657.421.32:373.546

THE SYSTEM OF GLOBAL INDICATORS OF SCIENCE AND TECHNOLOGY AND THE TRENDS OF DECLINING EFFECTIVENESS OF APPLIED RESEARCH IN THE REPUBLIC OF ARMENIA

Ashot Kh. Markosyan
Political, Legal and Economic
Researches and Forecasting NGO
125, Armenakyan St. Yerevan
Shushi University of Technology
7 V.Vagharshyan, Stepanakert, RA
ashotmarkos@rambler.ru
ORCID iD: 0000-0002-5077-4253
Republic of Armenia

Vahagn G. Khachaturyan
Political, Legal and Economic
Researches and Forecasting NGO
125, Armenakyan St. Yerevan
vahagnkhachaturyan7@gmail.com
ORCID iD: 0000-0003-0412-9170
Republic of Armenia

Aram K. Harutyunyan
Shushi University of Technology
7 V.Vagharshyan, Stepanakert, RA
aram.harutyunyan2255@gmail.com
ORCID iD: 0000-0002-0212-2699
Republic of Artsakh

Meruzhan A. Markosyan
Political, Legal and Economic
Researches and Forecasting NGO
125, Armenakyan St. Yerevan
markosyan844@gmail.com
ORCID iD: 0000-0003-3608-0375
Republic of Armenia

Veronika G. Petrosyan
Shushi University of Technology
7 V.Vagharshyan, Stepanakert, RA
nika_33@list.ru
ORCID iD: 0009-0004-3347-8411
Republic of Artsakh

https://doi.org/10.56243/18294898-2023.1-31

A.Kh. Markosyan, V.G. Khachaturyan, A.K. Harutyunyan, M.A. Markosyan, V.G. Petrosyan

Abstract

On the global market, the development growth rates of various countries differ strongly from one another. This results in a modification of their function and significance in terms of regional development. The foundation is the rate at which intellectual capital is developing and materializing as it is realized in the field of research and development.

The objective of this study is to investigate the problems related to the structure and content of intellectual capital in Armenia, with the aim of forming the best balance of policy and practical measures implemented in the mentioned field, which will provide an effective development environment for the implementation of research and design works and their results. A detailed explanation of the essential actions necessary to accomplish the stated objective is provided. A substantive description of the priority steps aimed at achieving the stated goal is presented.

Key words: high-tech, applied research, intellectual property, experimental development, Human Development Index.

Introduction

While mankind was still in its infancy, the Greeks observed that everything is constantly changing and evolving, including nature, social order and its laws, and human relationships.

This phenomenon is characterized by the concept of "Pantarei" (Pantarhei is a simplified version of the teachings of the famous Greek philosopher Heraclitus of the late 6th century BC. He said “no man ever steps in the same river twice, for it's not the same river and he's not the same man.” That is nothing stays still, 'everything flows': everything and everywhere, like a river, is constantly in motion. There were views about the forces that ensure development and everyone began to understand that this force is man. It is that person who, through the use of his/her organizational abilities, transforms the environment and takes the lead in advancing social relations and the means of production.

It should also be noted that society adopted this concept quite late. This was due to the fact that the ways of development seemed to be obvious. One of them was called the **extensive path**, when the physical capabilities of the state are expanded for public needs, for example, the areas of pastures and arable lands, the number of livestock, etc. are increased. The second way is the **intensive development**, in which case, not the physical sizes and dimensions of the resources, but their qualitative characteristics are increased. In other words, a unit of arable land produces, for example, more wheat, and a unit of animals produces more milk, meat, wool, eggs, etc. In other words, in the case of intensive development, labor productivity increases. Let's discuss a specific example: suppose the yield of wheat from any land increases by X percent. How can this happen? It is clear that in such a case fertilizers, different types of herbicides, chemical substances were used, that is, certain results of science and scientific and technical activities were used. It should be noted that there are fewer opportunities for the world's natural resources to grow with every passing day, and they are no longer able to meet society's growing demand for consumer goods. In essence, there are no longer any opportunities for the planet Earth to realistically increase its production resources. Non-renewable resource extraction options have been drastically diminished. The enormous scale of the production increase is what has led to this situation. Only during the last 25 years,

the amount of raw iron consumed only in the last 25 years is comparable to the amount of metal ore consumed over the course of human development. It is not a coincidence that various nations are attempting to claim the resources of the Earth's poles in order to increase their mineral reserves, as well as the implementation of fantastic programs like, for instance, "Lithium importation from other planets or space objects," given that lithium is an efficient raw material for electricity generation. The realization of all this requires a certain period of time and greatly increases the cost of extraction and use of various types of raw materials. Getting artificial materials and raw materials through scientific processing is the main way to avoid all of this seemingly impossible task. Let's not forget that in terms of consumption and quality attributes, the types of raw materials obtained through innovative programs can be superior to the types of natural raw materials. Such an example is the production of natural and artificial rubber. It should also be noted that in human history, scientific and scientific-technical activity appeared when society was able to create additional output, that is, to create and accumulate more than it consumed. At the expense of surplus value, a certain class of people appeared who could engage in science and scientific and technical activities, as noted by one of the classics, Karl Marx, the Egyptian pyramids could be built only when surplus value was created in Egypt.

Scientific and scientific-technical activity is the driving force that can push the society forward at an accelerated pace. An example of this is the steam engine created by James White, which was interpreted by the same Karl Marx as: mankind benefited more in the year after White's invention of the steam engine than it had spent on all scientific research put together before White's invention of the steam engine.

Thus, discoveries and innovations have a vital importance and role in meeting the demands of the society. White's steam engine, which was the centerpiece of the third industrial revolution, was designed to meet seemingly impossible human demands. In particular, the replacement of manual labor made it possible to significantly increase the volume of products and services produced, which was the only way to meet the demands of the growing population.

In a broad sense, scientific and scientific-technical activities fundamentally change the economic and social environment of society, as well as have a significant impact on people and society's activities. In particular, the population of planet Earth grew particularly rapidly during the 19th century, a consequence of White's invention and use of the internal combustion engine. The use of various technical means (tractor, harvester and other agricultural means) significantly increased the agricultural sown area, which provided enough food to feed people and thus increase the reproduction of the population by hundreds of millions of people.

It is also known that the computer was recognized as the best technical tool of the 20th century, it also made it possible to create the Internet, which makes both production and socio-economic life incredibly easy and efficient. It can be said that through science and scientific and technical activities, both real and virtual worlds are currently operating on planet earth. Often the main developments and results of science and scientific and technical activities are obtained not for the achievement of civil achievements but for military purposes. In some states, although they are unable to develop and produce simple household goods, they produce sophisticated missiles and types of armaments and weapons. According to the calculations of some experts, it is possible to eliminate the planet Earth more than 2000 times

with the weapons created on the planet Earth. That is, science and scientific and technical activities contribute to the improvement of human life conditions on the one hand and become a threat to the existence of the planet Earth on the other hand.

Based on socio-economic and military-political ideology, different ideologies and practices regarding science and scientific-technical activities have been formed and are operating in different countries. Each state, based on its capabilities, in order to survive and develop, should be able to correctly assess its place and role in the given region (world) and use the achievements of science to increase the well-being of the population and ensure economic growth.

The best way to achieve this is the implementation of sufficient volume of expenses for the implementation of scientific and technical developments and the introduction of innovations.

Researchers are regarded as specialists whose work advances theories, develops concepts, models new research tools, and creates computational techniques. Additionally, master's degree candidates and students are included in the research. The Organization for Economic Co-operation and Development (OECD) defines research as creative work undertaken to increase the stock of knowledge, including knowledge about people, culture and society, and the use of that knowledge to develop new applications. Research and development (R&D) includes activities that organizations undertake to innovate and introduce new products and services. It frequently marks the beginning of the development process. Based on the findings of the first stage, mass production of new goods and services is organized in the second stage. When the domestic market of the target nation is fully stocked with the specified goods and services, the third stage of their development—their export to other nations—begins. The fourth stage is the period of "death of the product or service" - it is withdrawn from production and market. Depending on the quality of innovative product or service developments, the marketing studies conducted and how they meet consumer needs, "product life cycles" can be short-term or long-term (prospective). This circumstance determines the profitability (or loss) of the creation and sale of the product or service.

Typically, the objective is to expand the company's revenue stream and introduce new goods and services to the market. With no other options available to them, consumers are forced to buy them at a high "additional" cost, which ensures the increase in profits of those businesses that followed the path of innovations. This strategy is due to the dominant position of a newly created product or service in the market of newly created products and services (the principle of "picking the cream").This consists in taking the risk of realizing the production of innovative products and services and spending on innovations in comparison with "ordinary" companies, with the aim of increasing the share of innovative products and services in the market.

You cannot separate how you feel about money from it. No matter how experienced or inexperienced the decision-maker is in economics, he must make an effort to think irrationally and predictably in order to make better investment decisions. Experimental development and basic and applied research are both included in R&D [1].

1. Without any specific application or use, basic research is theoretical or experimental work done primarily to learn more about the underlying causes of phenomena and observable facts.

2. Applied research is undertaken in order to acquire new knowledge, which is mainly carried out for a specific practical purpose.
3. Experimental development is systematic work based on knowledge gained from research and (or) practical experience aimed at obtaining or improving new materials, products or devices.

Given the pace of technological advancement, R&D is essential for organizations to remain competitive. It will allow companies to create products that are difficult for their competitors to duplicate. At the same time, R&D efforts can lead to improved organizational productivity [1].

An intellectual capital-based consumption and production system is known as a knowledge economy. It specifically refers to the capacity to profit from scientific breakthroughs and applied research. Intellectual capital is the value of a company's employees' knowledge, skills, business training, or any proprietary information that can provide a company with a competitive advantage. Intellectual capital is considered an asset and can be broadly defined as the collection of all information resources at a company's disposal that can be used to generate profits, acquire new customers, create new products, or otherwise improve the business. It is the sum of employee expertise, organizational processes and other intangible values that contribute to the company's bottom line [2. 3]. Because of this, in the modern world, intangible assets—which include research and development outcomes, which are nothing more than the value of intellectual work (capital), or, in other words, scientific thought—have a much larger share in the assets of organizations of this type. developed innovations and other studies that have found use in the real world and are very profitable for the organization.

As an illustration, the assets of the well-known company Coca-Cola are estimated to be worth about 160 billion dollars, with intangible assets accounting for the majority (more than 85%) of that total. In other words, the company's manufacturing equipment, transportation infrastructure, warehouses, and physical structures are worth many times less than the market value of the intangible assets used by the particular company.

Many people, for various reasons, are afraid of increasing the funding of innovative products and services, because the market has its rules of the game, and the consumer has his "whims", which can often change unexpectedly, thereby rejecting the consumption of this or that innovative product in the market. Those risks are dangerous and misleading, they must be overcome (to be demystified), turning finances into investments, savings and the ability to manage economic opportunities through smart spending [2].

A developed nation with a comparatively high level of economic growth and security is considered to have a developed economy. The amount of technological infrastructure, industrialization, per capita income or gross domestic product, and population standard of living are all common metrics for determining a nation's level of development. If the gross domestic product per capita is high, but the state has poor infrastructure and income inequality, it cannot be considered a developed country [4].

The Human Development Index (HDI) summarises a nation's health, education, and literacy levels into a single figure. It can be used to evaluate the degree of development in a nation. The Human Development Index (HDI) of the United Nations looks at three aspects of living standards: literacy, educational attainment, and access to medical care. That information is quantified from 0 to 1. The HDI index is greater than 0.8 in the majority of developed nations [4, 5].

Fig. 1 shows the Human Potential Development Index (HDI) for the Russian Federation, Armenia, Georgia, and Azerbaijan for the period 2000–2021.

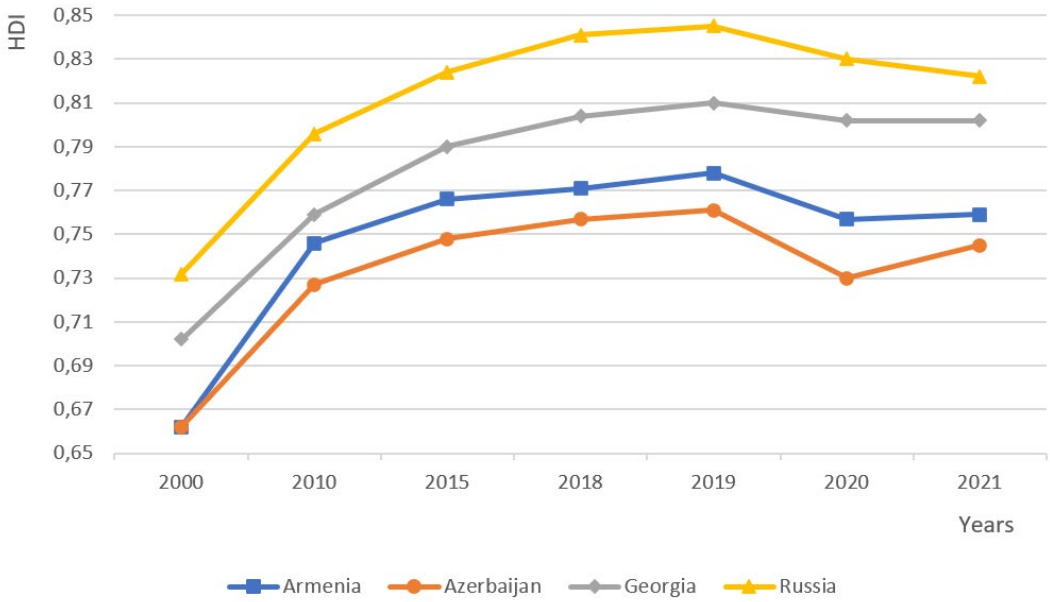

Fig. 1 Dynamics of Human Potential Development Index (HDI) of Armenia, Georgia, Azerbaijan and the Russian Federation for 2000-2021

It is obvious that Armenia is inferior to the Russian Federation and Georgia in terms of the Human Potential Development Index (HDI), but it is ahead of Azerbaijan, whose financial capabilities are incomparably greater than those of Armenia.

The Human Development Index (HDI) is not the only metric used to evaluate the economic health of a nation. Future research will be required to ascertain the effects of investment programs on enhancing the effectiveness of research, design, and construction, as well as on enhancing the institutional environment, developing infrastructure, stabilizing the macroeconomic situation, and fostering organizational continual competitiveness [6].

A debate between GDP and HDI, as well as other measures characterizing people's well-being (for example, Gross National Happiness concept is assumed that sustainable development should take a holistic approach to the concepts of progress and give equal importance in the debate between non-economic aspects of well-being), is not sufficiently substantiated whether it is possible to shift the policy vector from the struggle of competing paradigms to the field of obtaining information about well-being directly from the population [7].

Conflict Setting

Analysis of the export situation for Armenia's results of applied research and experimental development is required, as well as recommendations for improving the effectiveness of the work being done in this direction.

Research Results

Let's present the 2020 figures for the use of intellectual property income in US dollars for a few former Soviet Union nations (Tab. 1) [8].

Table 1

Intellectual property in several nations of the former Soviet Union for use in 2020 receipts in US $

Country	RF	Belarus	Kazakhstan	Georgia	Moldova	Tajikistan	Azerbaijan	Armenia
Receipts (US $)	6,809,070,000	3,211,793,000	146,184,000	54,890,640	26,640,000	22,670	0	0

The Organization for Economic Co-operation and Development and Eurostat collaborated to develop the high-tech export estimation method. It uses a "product approach" based on R&D intensity for product groups from Germany, Italy, Japan, the Netherlands, Sweden, and the United States rather than a "sector approach" (spending divided by total sales). Examples of high-tech industries are airplanes, computers, pharmaceuticals, electrical equipment, and most chemicals. Medium and low technologies include rubber, plastics, food processing, textiles, clothing, footwear. Technology exports have grown rapidly in Eastern European countries, although most of these countries, with the exception of Hungary and the Czech Republic, continue to focus mainly on low- and medium-low technology exports. Because industries that specialize in several high-tech industries can also produce low-tech products. In this regard, it is more convenient to use a method that takes into account only R&D intensity. However, it is very important to take into account such high-tech characteristics as "know-how", the potential of the organization's scientific staff, and the technologies recorded in invention patents [8].

In the European scientific and educational community, the following classification of science and technology fields is used [9]:

1. Natural sciences; 2. Engineering and technology; 3. Medical sciences; 4. Agricultural sciences; 5. Social sciences; 6. Humanities.

This classification was adopted based on the recommendations of the Science and Technology Sector Classification (FOS) created by the Organization for Economic Co-operation and Development (OECD) Committee on Science and Technology Policy and the UNESCO Recommendation on the International Standardization of Science and Technology Statistics [10, 11]. In the Republic of Armenia, when announcing tenders on contractual (thematic) and applied (experimental developments) topics, the authorized body of the government issues the relevant regulations that govern the fields and professions of scientific and scientific-technical activities.

Tab. 2 shows a comparison of the classification of the fields of science and technology used in the European Scientific and Educational Area and in the Republic of Armenia.

Table 2 demonstrates some of the differences between the classification of scientific and technological fields used in the Republic of Armenia and the European scientific and educational community. Contrary to the Republic of Armenia, the classification used in Europe's scientific and educational community specifically provides a section for "other sciences" for each field because it is unable to fully cover all aspects of the field. Additionally, the scientific directions that are part of the official classification documents used in the European Scientific and Educational Area are defined for each department (for the Department of Natural Sciences, for instance, the following scientific directions are defined: Earth sciences and associated environmental disciplines: Geosciences, Multidisciplinary, Mineralogy, Palaeontology , Geochemistry and Geophysics, Physical Geography, Geology,

Volcanology, Environmental sciences, Meteorology and Atmospheric Sciences, Climatic Research, Oceanography, Hydrology, Water Resources).

Table 2

Comparison of the classification of science and technology fields used in the European scientific and educational area and in the Republic of Armenia

European Scientific and Educational Area	Republic of Armenia
1. NATURAL SCIENCES	
1.1 Mathematics 1.2 Informatics and computer sciences 1.3 Physics 1.4 Chemistry 1.5 Earth and related environmental sciences 1.6 Biological sciences 1.7 Other natural sciences	1.1 Mathematics 1.2 Informatics and computer sciences 1.3 Physics and Astronomy 1.4 Chemistry 1.5 Earth and related environmental sciences 1.6 Biological Sciences
2. ENGINEERING AND TECHNOLOGY	
2.1 Urban planning and architecture 2.2 electrical engineering, electronics, information engineering 2.3 Machine building 2.4 Chemical technologies 2.5 Materials science 2.6 Medical device engineering 2.7 Ecology 2.8 Environmental biotechnology 2.9 Industrial biotechnology 2.10 Nanotechnology 2.11 Other techniques and technologies	2.1 Urban planning and architecture 2.2 Electrical engineering, electronics, energy, computer and information technologies 2.3 Mechanics 2.4 Machine science and machine building 2.5 Chemical technologies 2.6 Materials science 2.7 Medical device construction 2.8 Ecology 2.9 Biotechnology 2.10 Nanotechnology
3. MEDICAL SCIENCES	
3.1 General medicine 3.2 Clinical medicine 3.3 Health sciences 3.4 Medical biotechnology 3.5 Other medical sciences	3.1 General medicine 3.2 Clinical medicine 3.3 Medical biotechnology
4. AGRICULTURAL SCIENCES	
4.1 Agriculture, forestry, fish farming 4.2 Animal husbandry 4.3 Veterinary medicine 4.4 Agricultural biotechnology 4.5 Other agricultural sciences	4.1 Animal husbandry, veterinary medicine 4.2 Crop production 4.3 Soil science, agrochemistry, plant protection 4.4 Agricultural biotechnology
5. SOCIAL SCIENCES	
5.1 Psychology 5.2 Economics and business 5.3 Pedagogical sciences 5.4 Sociology 5.5 Right 5.6 Political sciences 5.7 Social and economic geography 5.8 Mass Media and Communications 5.9 Other social sciences	5.1 Psychology 5.2 Economics and business 5.3 Pedagogical sciences 5.4 Sociology 5.5 Right 5.6 Political sciences 5.7 Social and economic geography 5.8 Mass Media and Communications
6. HUMANITIES	
6.1 History, archaeology 6.2 Linguistics, literary studies 6.3 Philosophy, ethics, religion 6.5 Art 6.5 Other humanities	6.1 History, archaeology 6.2 Linguistics, literary studies 6.3 Philosophy, ethics 6.4 Theology, religious studies 6.5 Art

This is not defined in the Republic of Armenia. The inclusion of the 2.3 Mechanics in the "Engineering and Technology" classification applied in Armenia is also unacceptable (in the process of contractual (thematic) financing, taking into account the current level of high development of this direction in Armenia, it has a negative impact on the value-added sector allocated to the "Engineering and Technology" sector on the process of allocating scarce funds).

Payments and receipts for the use of intellectual property are exchanged between residents and non-residents in exchange for license agreements and permission to use proprietary rights (such as patents, trademarks, copyrights, industrial processes, and designs, including trade secrets and patents).

The receipts for the use of intellectual property in the world are increasing dramatically over the years (Fig. 2) [12].

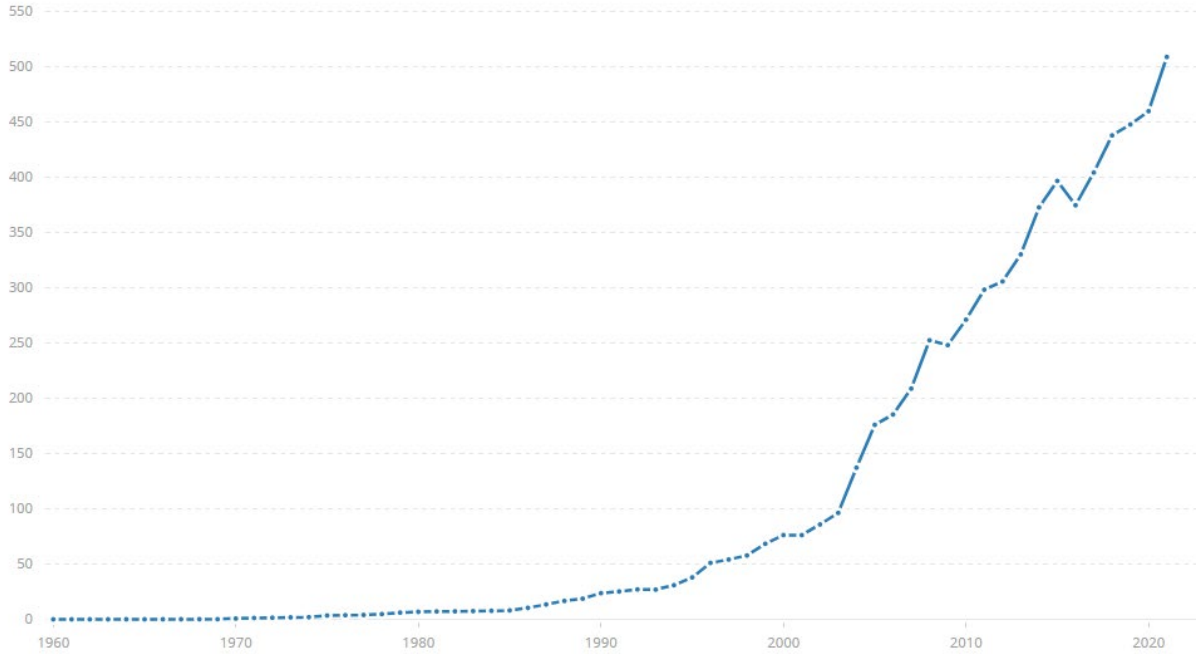

Fig. 2 Charges (revenues) for the use of intellectual property in the world in 1960-2021 (billion US$)

This most important indicator is zero in the Republic of Armenia (Table 1). The maximum receipts for the use of intellectual property in Azerbaijan were in 2012 - 28.18 million US $, in Georgia - in 2021 - 61.629 million US $.

The reasons for the emergence of this situation are diverse and varied, from legislative problems to inefficient management mechanisms of the sector.Only the fact that in 2016-2022 Value-added universities operating in Armenia have received as many invention patents as the Shushi University of Technology operating in Artsakh, which shows the depth of the deplorable situation [13].

2007-2021 share of high-tech in industrial products exported in the world in 2021 in 2020, it decreased by about 1.8 percent, reaching the level of 2008. level (Fig. 3) [14].

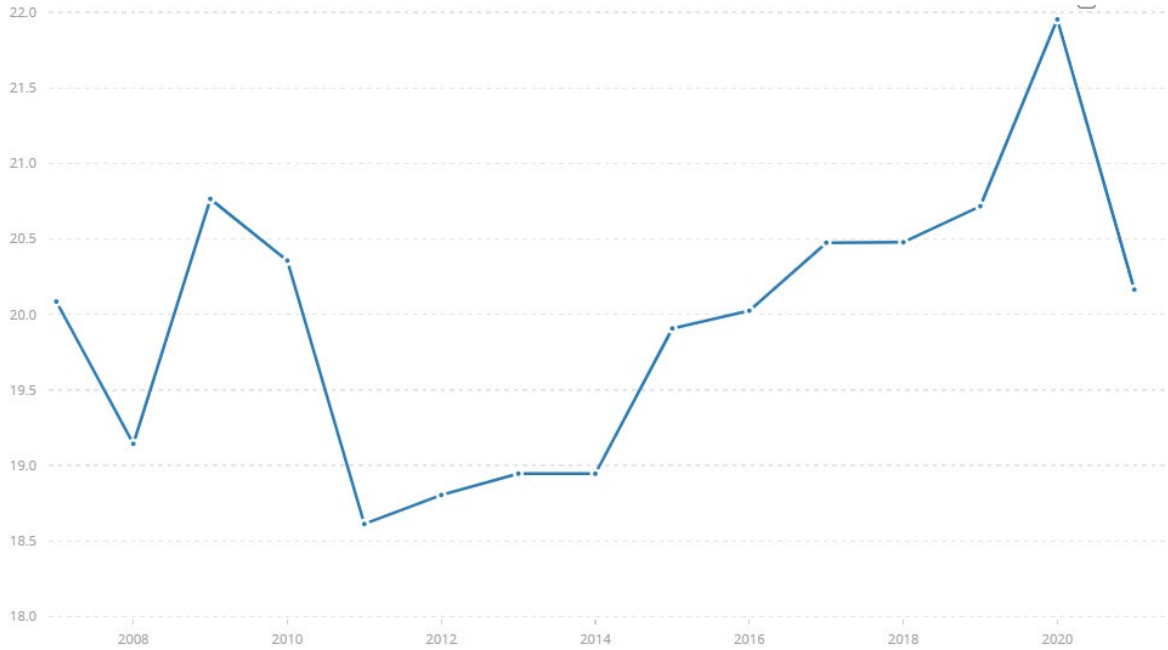

Fig. 3 High technology share in exported industrial products in the world in 2007-2021 (%)

In contrast, during the same period in 2021 compared with 2020, global exports of goods and services increased by 24.4 percent, from 22.59 trillion US dollars to 28.11 trillion US dollars (Fig. 4) [15].

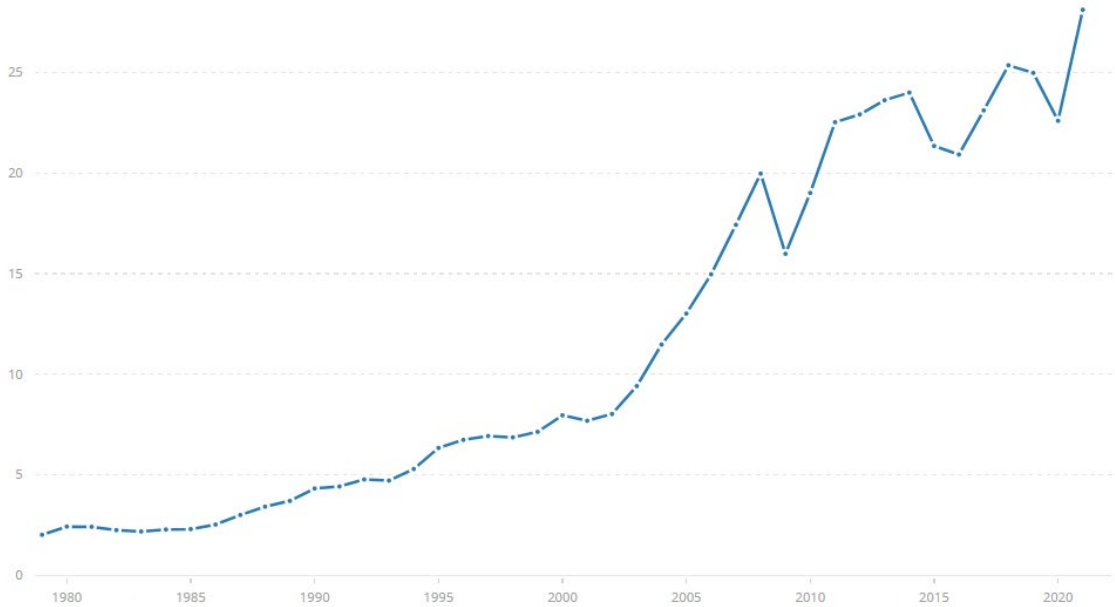

Fig. 4 Export of goods and services in the world 1978-2021 (trillion US$)

The high-tech sector among the industrial products exported from Armenia decreases from 10 per cent in 2019 to 6 per cent in 2021 (Fig. 5) [16].

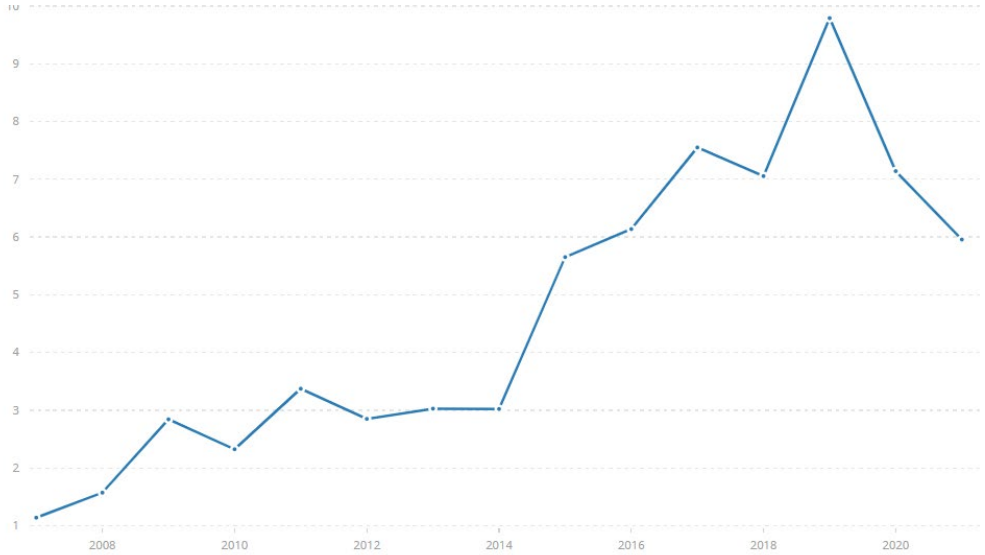

Fig. 5 High technology share (%) in industrial products exported from Armenia in 2007-2021

The volume of high technologies exported from Armenia, according to the UN analysis, 2007-2021. the average value for the period was 17.59 million US $ (maximum: 2019: 45.57 million US $, minimum: 2010: 4.73 million US $). In 2021 that figure was 37.56 millio dollars. Data for the comparison of indicators (million US dollars) for the average maximum, minimum, and 2021 volumes of high technology exports are presented in Fig. 6 and come from Armenia, Georgia, and Azerbaijan [17, 18, 19].

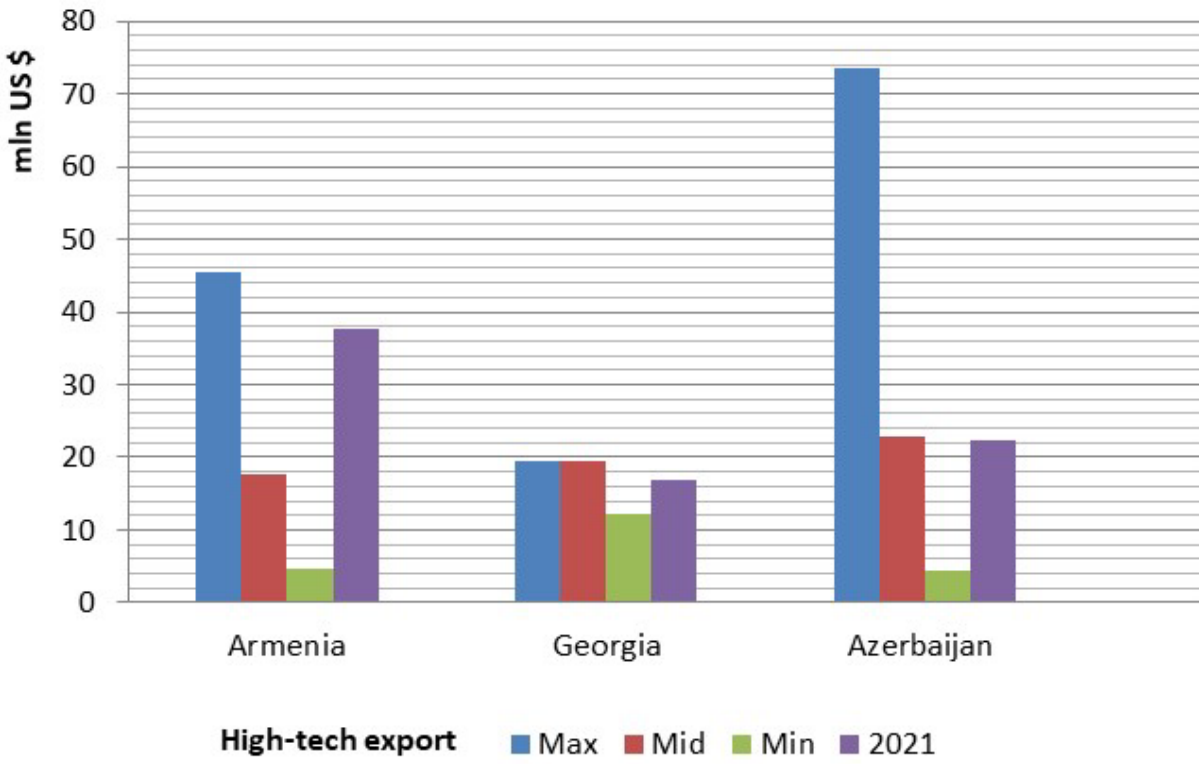

Fig. 6 Benchmarks of maximum, average, and minimum volumes of exported high technologies from Armenia, Georgia, and Azerbaijan in 2021 (million US dollars)

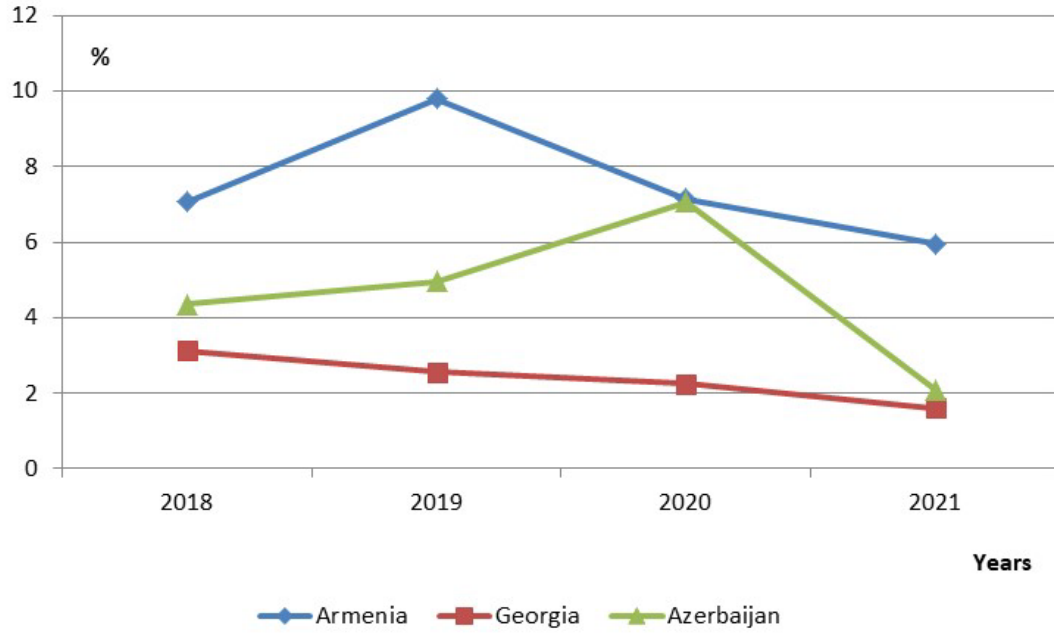

Fig. 7 Comparative changes in the high-tech sector in yearly exported industrial products from Armenia, Georgia and Azerbaijan in 2018-2021 (%) [16, 20, 21]

It can be seen from Figures 6 and 7 that the trend of decreasing high-tech share in exported volumes of industrial products is present in all three Transcaucasian republics.

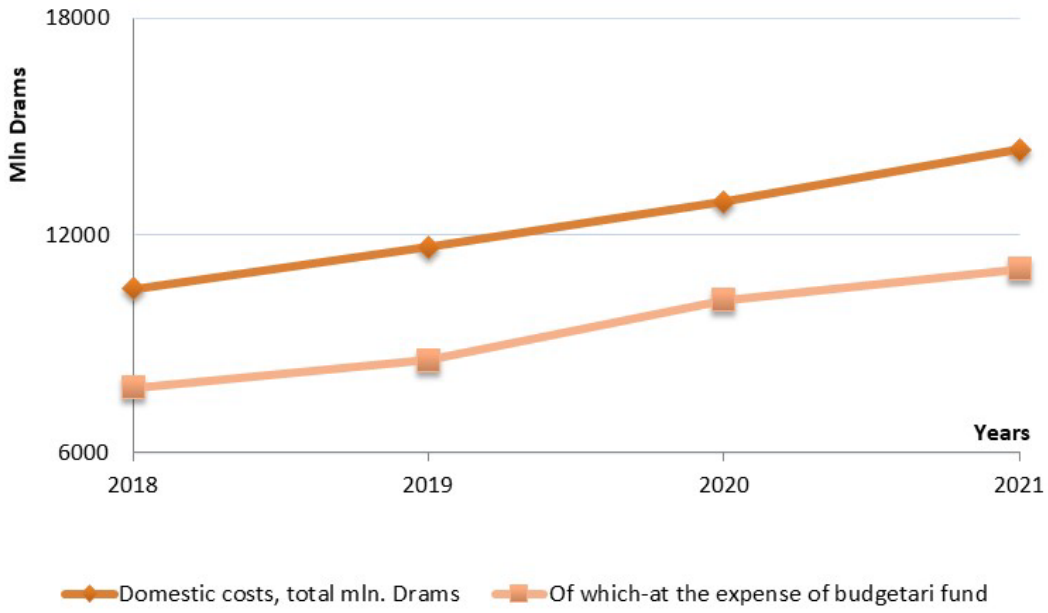

Fig. 8 The dynamics of continuous yearly growth of expenditures on R&D in the Republic of Armenia (million AMD) [22]

Analyzing the dynamics of continuous growth of expenditures on R&D in the Republic of Armenia by years (Fig. 8), it can be concluded that the problem should be solved by increasing the efficiency of management of the science field.

Conclusion

A thorough investigation is required to determine the causes of the republic's ongoing decline in applied research productivity over the past few years, which has occurred despite an increase in the amount of state funding for science, technical research, and related fields. The obvious actions listed below are advised until the study's findings are known:

1. Sharply increase the share allocated to applied research in science and scientific and technical programs in the country, setting clear output requirements.
2. To ensure the transparency of the implementation of scientific and scientific-technical program tenders and the availability of the decisions made. In the process of organizing tenders, reduce the limit of the influence of the human factor to a maximum of seven percent.
3. Through legislative changes, create equal starting conditions for scientific organizations to participate in basic funding programs, regardless of the structure of ownership.
4. To exclude the application of restrictions to persons carrying out science and scientific and technical activities, except for the cases when this is done by law.
5. The fields and professions of scientific and scientific-technical activities with appropriate classes should be defined by the government, specifying the scientific directions included in them for each department. In the "Engineering and Technology" field, the "2.3 Mechanics" section should be moved to the "Natural Sciences" field and included in the "1.3 Physics and Astronomy" section. Set a minimum allocation threshold for each direction.

References

1. Kenton W. Research and Development (R&D) Definition, Types, and Importance // https://www-investopedia-com.translate.goog/terms/r/randd.asp?_x_tr_sl=en&_x_tr_tl=hy&_x_tr_hl=hy&_x_tr_pto=sc
2. Hayes A. What Is the Knowledge Economy? Definition, Criteria, and Example // https://www-investopedia-com.translate.goog/terms/k/knowledge-economy.asp?_x_tr_sl=en&_x_tr_tl=hy&_x_tr_hl=hy&_x_tr_pto=sc
3. Chen J. Intellectual Capital: Definition, Types, Measurement, Importance// https://www-investopedia-com.translate.goog/terms/i/intellectual_capital.asp?_x_tr_sl=en&_x_tr_tl=hy&_x_tr_hl=hy&_x_tr_pto=sc
4. Majaski C. What Is a Developed Economy? Definition, How It Works, HDI Index // https://www-investopedia-com.translate.goog/terms/d/developed-economy.asp?_x_tr_sl=en&_x_tr_tl=hy&_x_tr_hl=hy&_x_tr_pto=sc
5. Human Development Insights// https://hdr-undp-org.translate.goog/data-center/country-insights?_x_tr_sl=en&_x_tr_tl=hy&_x_tr_hl=hy&_x_tr_pto=sc#/ranks
6. Polovyan A.V., Sinitsina K.I.(2020) Human development index as a regulator of the country's economic complexity // Bulletin of the Institute of Economic Research, 2020, N1(17), p.5-13. file:///C:/Users/HP/Downloads/indeks-chelovecheskogo-razvitiya-kak-regulyator-ekonomicheskoy-slozhnosti-strany.pdf
7. Monni, S., Spaventa, A. Beyond GDP and HDI: Shifting the focus from paradigms to politics. *Development* **56**, 227–231 (2013). https://doi.org/10.1057/dev.2013.30pa
8. Charges for the use of intellectual property, payments (BoP, current US$) - Country Ranking // https://www.indexmundi.com/facts/indicators/BM.GSR.ROYL.CD/rankings

9. Field of science and technology classification // https://joinup.ec.europa.eu/collection/eu-semantic-interoperability-catalogue/solution/field-science-and-technology-classification/about
10. UNESCO: Recommendation concerning the International Standardisation of Statistics on Science and Technology // http://portal.unesco.org/en/ev.php-URL_ID=13135&URL_DO=DO_TOPIC&URL_SECTION=201.html
11. Revised Field of Science and Technology (FOS) Classification in the Frascati Manual // http://www.oecd.org/science/inno/38235147.pdf
12. Charges for the use of intellectual property, payments (BoP, current US$) // https://data.worldbank.org/indicator/BM.GSR.ROYL.CD
13. Tokmajyan H.V., Markosyan A.Kh., Khachaturyan V.G., Martirosyan T.S., Harutyunyan A.K. (2022) The main causes of motivation lack for inventions creaton in states with transitional economy and primary measures resulting from the situation //Bulletin of High Technology, Stepanakert, 2022, N4, p. 3-15. doi.org/10.56243/18294898-2022.4-3
14. High-technology exports (% of manufactured exports) // ttps://data.worldbank.org/indicator/TX.VAL.TECH.MF.ZS
15. Exports of goods and services (BoP, current US$) // https://data.worldbank.org/indicator/BX.GSR.GNFS.CD
16. Armenia: High tech exports, percent of manufactured exports // https://www.theglobaleconomy.com/Armenia/High_tech_exports_percent_of_manufactured_exports/
17. Armenia: High tech exports// https://www.theglobaleconomy.com/Armenia/High_tech_exports/
18. Azerbaijan: High tech exports // https://www.theglobaleconomy.com/Azerbaijan/High_tech_exports/
19. Georgia: High tech exports // https://www.theglobaleconomy.com/Georgia/High_tech_exports/
20. Georgia: High tech exports, percent of manufactured exports// https://www.theglobaleconomy.com/Georgia/High_tech_exports_percent_of_manufactured_exports/
21. Azerbaijan: High tech exports, percent of manufactured exports // https://www.theglobaleconomy.com/Azerbaijan/High_tech_exports_percent_of_manufactured_exports/
22. Domestic Costs For Research and Development RA // https://armstat.am/file/doc/99533268.pdf

References

1. Kenton W. Research and Development (R&D) Definition, Types, and Importance // https://www-investopedia-com.translate.goog/terms/r/randd.asp?_x_tr_sl=en&_x_tr_tl=hy&_x_tr_hl=hy&_x_tr_pto=sc
2. Hayes A. What Is the Knowledge Economy? Definition, Criteria, and Example // https://www-investopedia-com.translate.goog/terms/k/knowledge-economy.asp?_x_tr_sl=en&_x_tr_tl=hy&_x_tr_hl=hy&_x_tr_pto=sc
3. Chen J. Intellectual Capital: Definition, Types, Measurement, Importance// https://www-investopedia-com.translate.goog/terms/i/intellectual_capital.asp?_x_tr_sl=en&_x_tr_tl=hy&_x_tr_hl=hy&_x_tr_pto=sc
4. Majaski C. What Is a Developed Economy? Definition, How It Works, HDI Index // https://www-investopedia-com.translate.goog/terms/d/developed-economy.asp?_x_tr_sl=en&_x_tr_tl=hy&_x_tr_hl=hy&_x_tr_pto=sc

5. Human Development Insights// https://hdr-undp-org.translate.goog/data-center/country-insights?_x_tr_sl=en&_x_tr_tl=hy&_x_tr_hl=hy&_x_tr_pto=sc#/ranks
6. Половян А.В., Синицына К.И. (2020) Индекс человеческого развития как регулятор экономической сложности страны //Вестник института экономических исследований, 2020, N1(17), с.5-13. file:///C:/Users/HP/Downloads/indeks-chelovecheskogo-razvitiya-kak-regulyator-ekonomicheskoy-slozhnosti-strany.pdf
7. Monni, S., Spaventa, A. Beyond GDP and HDI: Shifting the focus from paradigms to politics. *Development* **56**, 227–231 (2013). https://doi.org/10.1057/dev.2013.30pa
8. Charges for the use of intellectual property, payments (BoP, current US$) - Country Ranking // https://www.indexmundi.com/facts/indicators/BM.GSR.ROYL.CD/rankings
9. Field of science and technology classification // https://joinup.ec.europa.eu/collection/eu-semantic-interoperability-catalogue/solution/field-science-and-technology-classification/about
10. UNESCO: Recommendation concerning the International Standardisation of Statistics on Science and Technology // http://portal.unesco.org/en/ev.php-URL_ID=13135&URL_DO=DO_TOPIC&URL_SECTION=201.html
11. Revised Field of Science and Technology (FOS) Classification in the Frascati Manual // http://www.oecd.org/science/inno/38235147.pdf
12. Charges for the use of intellectual property, payments (BoP, current US$) // https://data.worldbank.org/indicator/BM.GSR.ROYL.CD
13. Tokmajyan H.V., Markosyan A.Kh., Khachaturyan V.G., Martirosyan T.S., Harutyunyan A.K. (2022) The main causes of motivation lack for inventions creaton in states with transitional economy and primary measures resulting from the situation //Bulletin of High Technology, Stepanakert, 2022, N4, p. 3-15. doi.org/10.56243/18294898-2022.4-3
14. High-technology exports (% of manufactured exports) // ttps://data.worldbank.org/indicator/TX.VAL.TECH.MF.ZS
15. Exports of goods and services (BoP, current US$) // https://data.worldbank.org/indicator/BX.GSR.GNFS.CD
16. Armenia: High tech exports, percent of manufactured exports // https://www.theglobaleconomy.com/Armenia/High_tech_exports_percent_of_manufactured_exports/
17. Armenia: High tech exports// https://www.theglobaleconomy.com/Armenia/High_tech_exports/
18. Azerbaijan: High tech exports // https://www.theglobaleconomy.com/Azerbaijan/High_tech_exports/
19. Georgia: High tech exports // https://www.theglobaleconomy.com/Georgia/High_tech_exports/
20. Georgia: High tech exports, percent of manufactured exports// https://www.theglobaleconomy.com/Georgia/High_tech_exports_percent_of_manufactured_exports/
21. Azerbaijan: High tech exports, percent of manufactured exports // https://www.theglobaleconomy.com/Azerbaijan/High_tech_exports_percent_of_manufactured_exports/
22. Domestic Costs For Research and Development RA // https://armstat.am/file/doc/99533268.pdf

ԳԻՏՈՒԹՅԱՆ ԵՎ ՏԵԽՆՈԼՈԳԻԱՆԵՐԻ ԳԼՈԲԱԼ ՑՈՒՑԱՆԻՇՆԵՐԻ ՀԱՄԱԿԱՐԳԸ ԵՎ ԿԻՐԱՌԱԿԱՆ ՀԵՏԱԶՈՏՈՒԹՅՈՒՆՆԵՐԻ ԱՐԴՅՈՒՆԱՎԵՏՈՒԹՅԱՆ ՆՎԱԶՄԱՆ ՄԻՏՈՒՄՆԵՐԸ ՀԱՅԱՍՏԱՆԻ ՀԱՆՐԱՊԵՏՈՒԹՅՈՒՆՈՒՄ

Մարկոսյան Ա.Խ.[1, 2], Խաչատուրյան Վ.Գ.[1], Հարությունյան Ա.Կ.[2],
Մարկոսյան Մ.Ա.[1], Պետրոսյան Վ.Գ.[2]
[1] Քաղաքագիտական, իրավագիտական, տնտեսագիտական հետազոտությունների և կանխատեսումների ՀԿ
[2] Շուշիի տեխնոլոգիական համալսարան

Տարբեր երկրների զարգացման աճի տեմպերը համաշխարհային շուկայում խիստ տարբերվում են միմյանցից: Տարածաշրջանային զարգացման կտրվածքով դա հանգեցնում է նրանց դերի և նշանակության փոփոխության: Հիմքում՝ մտավոր կապիտալի աճի տեմպերի փոփոխության արագությունն է, որն իրականացվում և նյութականացվում է հետազոտությունների ոլորտում: Սույն աշխատանքում հեղինակները փորձել են հետազոտել Հայաստանում մտավոր կապիտալի կառուցվածքին և բովանդակությանը առնչվող հիմնախնդիրները՝ նպատակ ունենալով ձևավորելու նշված ոլորտում իրականացվող քաղաքական և գործնական միջոցառումների լավագույն հարաբերակցություն, որով կապահովվի իրականացվող հետազոտական և նախագծակոնստրուկտորական աշխատանքների և դրանց արդյունքների կիրառման համար արդյունավետ զարգացման միջավայր: Ներկայացվել է նշված նպատակին հասնելուն ուղղված առաջնահերթ քայլերի բովանդակային նկարագիրը:

Բանալի բառեր. բարձր տեխնոլոգիաներ, կիրառական հետազոտություն, մտավոր սեփականություն, փորձարարական մշակում, մարդկային ներուժի զարգացման ինդեքս:

СИСТЕМА ГЛОБАЛЬНЫХ ИНДИКАТОРОВ НАУКИ И ТЕХНОЛОГИЙ И ТЕНДЕНЦИИ СНИЖЕНИЯ ЭФФЕКТИВНОСТИ ПРИКЛАДНЫХ ИССЛЕДОВАНИЙ В РЕСПУБЛИКЕ АРМЕНИЯ

Маркосян А.Х.[1,2], Хачатурян В.Г.[1], Арутюнян А.К.[2],
Маркосян М.А.[1], Петросян В.Г.[2]
[1] ОО по политологическим, правовым, экономическим исследованиям и прогнозированию
[2] Шушинский технологический университет

Темпы роста развития разных стран на мировом рынке сильно отличаются друг от друга. С точки зрения регионального развития это приводит к изменению их роли и значения. В основе - скорость изменения темпов роста интеллектуального капитала, которая реализуется и материализуется в сфере исследований. В данной работе авторы попытались исследовать проблемы, связанные со структурой и содержанием интеллектуального капитала в Армении, с целью формирования наилучшего соотношения политических и практических мероприятий, реализуемых в данной сфере, чтобы обеспечить эффективную среду для развития исследовательских и проектно-конструкторских работ а также внедреня полученных результатов. Сформулированы первоочередные задачи, необходимые для достиженя указанной цели.

Ключевые слова: высокие технологии, прикладные исследования, интеллектуальная собственность, экспериментальные разработки, индекс развития человеческого потенциала.

Submitted on 16.02.2023
Sent for review on 17.02.2023
Guaranteed for printing on 28.04.2023

UDC - 330.341.42:338.001.36

DETERMINATION OF THE ECONOMIC-ECOLOGICAL EFFECTIVENESS OF USING ORGANIC MINERAL FERTILIZERS AND GROWTH PROMOTERS IN POTATO CROPS CULTIVATED IN THE FOOTHILLS OF THE REPUBLIC OF ARTSAKH

Valeri A. Aleksanyan
Shushi University of Technology
7 V. Vagharshyan, Stepanakert, RA
artsakhgk@rambler.ru
ORCID iD: 0000-0001-8136-5236
Republic of Artsakh

Manush Sh. Mirzoyan
Shushi University of Technology
7 V. Vagharshyan, Stepanakert, RA
gjasmin2009@mail.ru
ORCID iD: 0000-0003-1437-4807
Republic of Artsakh

Saribek B. Galstyan
Shushi University of Technology
7 V. Vagharshyan, Stepanakert, RA
galstyan.saribek@mail.ru
ORCID iD: 0000-0001-6728-7817
Republic of Artsakh

Meruzhan H. Galstyan
Agricultural Scientific Center of the Ministry of Economy
of the Republic of Armenia
1 Isi-Le-Mulino, Ejmiacin
galstyan.merujan@mail.ru
ORCID iD: 0000-0001-6703-5089
Republic of Armenia

https://doi.org/10.56243/18294898-2023.1-48

Abstract

The article presents the results of the studies on the changes in the quantity, marketability and quality indicators of the potato crop under the influence of the application of organic mineral fertilizers and growth promoters in the post-forest brown soils of the Askeran region of the Artsakh Republic, in potato fields grown in arid conditions.

Two-year research has revealed that although the one-time application of equivalent amounts of organic and mineral fertilizers equally affected the quantity, marketability and

quality indicators of the potato crop, fractional or combined application of these fertilizers had a more beneficial effect on the specified indicators of potatoes than their one-time application.

At the same time, the studies revealed that in the one-time and fractional applications of organomix and mineral fertilizers, as well as bio-liquid application variants, compared to the variant without fertilization, the content of nitrates increased by 45-115 mg/kg, but their amount in the potato crop is within the limits of marginal permissible density. (MPD)

Due to the limitation and high cost of mineral fertilizers, fertilize the potato fields with organomix at the rate of 8 t/ha, 60% of which is in sowing and 40% with nutrition, first soak the potato planting material with a solution of bio-liquid (14 l/ha) 2-3 days before sowing and as a result, a potato crop of 350-360 c/ha will be ensured, with a high content of starch and ascorbic acid (vitamin C), which is proposed to be invested in agricultural production.

Key words: organomix, organic fertilizers, bio-liquid, potato arid condition, nitrates, starch.

Introduction

The high level of chemicalization in modern agriculture has led to negative environmental consequences. The growth of anthropogenic impact on the natural environment has set serious tasks for agricultural science to develop and apply alternative methods of farming.

Many researchers confirmed with their studies the high efficiency of separate and combined use of mineral and organic fertilizers in increasing the yield of agricultural crops, especially potatoes, and improving quality indicators. In the conditions of the inaccessibility of the use of organic fertilizers, as well as the use of high-priced mineral fertilizers, great importance is attached to the fertilizers of organic origin and growth regulators obtained by the latest technologies, which provide high results with low costs, both in terms of increasing the yield, improving quality and reducing the cost [1-6].

According to the data of the Statistical Service of the Republic of Artsakh and the Ministry of Agriculture [7], on average for 2016-2022, the sown areas in potato-growing regions of the republic amounted to 641.5 hectares, the average yield was only 69.4 c/ha. 24.8% of the potato acreage in Artsakh, or 156.6 hectares, belong to the Askeran district, where the yield of this crop is almost equal to or lower than the average, low index of the republic.

The requirement of potato plants for nutrients is carried out during the entire vegetation period. However, the crop assimilates a larger amount of nitrogen and ash elements, especially during the stages of cocooning and flowering, during which the growth of potato bushes is more intense. It is noteworthy that in the mentioned stages, potato bushes absorb 2.5-4.9 times more potassium than nitrogen and 6-8 times more than phosphorus.

Potatoes are very demanding, especially to organic fertilizers, which, while providing plants with nutrients, simultaneously improve the agro-physical properties of the soil, creating favorable conditions for plant growth and tuber accumulation.

The foothill zone of Artsakh, being one of the most extensive zones of the republic, is somewhat different from other agricultural zones with its physico-geographical conditions, geological structure, climate, soil, water and vegetation characteristics [8,9]. The low amount of precipitation during the vegetation period, the low content of organic matter in the soil, the

plant residues accumulated under the influence of high air temperature are quickly mineralized, a small amount of humus accumulates in the soil, and in such conditions, without the use of scientifically based technologies, it is not possible to provide high and quality harvest, even under conditions of ideal agro-technics. Therefore, the systematic and unified solution of the mentioned problems is extremely important and up-to-date and derives from the requirements of the strategy for the development of agriculture in the region and the republic, and is considered one of the priorities of ensuring food security.

Conflict Setting

The aim of the work is to study and find out for the first time the effect of the equivalent amounts and dates of application of organomix organic fertilizer, growth stimulating bio-liquid and organo-mineral fertilizers obtained by the Armenian-Norwegian joint enterprise (Orwako) from household and agricultural waste with the latest biotechnological methods, on the yield of potatoes cultivated in the conditions of the foothills of the Republic of Artsakh on the quality indicators of the crop and compare them with the results of the influence of the ratio of mineral fertilizers used in the region. Based on the results of the research, to present concrete suggestions to the agricultural production in order to maintain the level of soil fertility in the region and obtain ecologically safe food through the gradual development of organic agriculture.

The reaction of the soil environment of the testing ground, the pH ranges from 6.9 to 7.1, the amount of cations (Ca^{++}, Mg^{++}) absorbed in the soil layer is 24.2-29.8 mg/equ in 100 grams of soil. Humus content is 3.3-3.4%, with easily hydrolysable nitrogen (N 3.4mg) is weakly provided, mobile phosphorus is medium (P_2O_5 is 5.1 mg) with exchangeable potassium-good (K_2O in 100g of soil is 34 ,0-36 mg).

The field experiments were set up with 3 repetitions, the size of each version in the repetition was 20m^2, according to the following scheme:

1. Checker (without fertilization)
2. Organomix 8t/ha one time, in sowing
3. Organomix 10t/ha one-time, in sowing
4. Organomix 5t/ha (in sowing) + $N_{30}P_{40}K_{40}$ (in sowing) + with N_{30} nutrition
5. Organomix 5t/ha in sowing + organomix 3t/ha (with nutrition) + bio-liquid 14l/ha (nutrition)
6. Bio-liquid 14 l/ha by wetting the planting material + organomix 5 t/ha (in sowing) + organomix 3 t/ha (nutrition)
7. $N_{80}P_{80}K_{80}$ (in sowing) + N_{40} (nutrition)

Studies were conducted on the Impala potato variety, the planting rate of which was 32.4 c/ha in 2021, and 33.0 c/ha in 2020, further processing and harvesting were carried out in accordance with the agricultural rules adopted in the region.

Agrochemical indicators of soils, plants and tubers were determined by universal methods in the scientific center of Artsakh, given in the methodological manual on agro-chemistry analysis, nitrates in tubers were determined using the nitrate meter -“Soeks”. The yield data were subjected to mathematical analysis by the method of dispersion analysis, the determination of the experimental error (Sx,%) and the most significant difference.

Research Results

According to the average data of the two-year repetitions of the field experiments, the equivalent doses and application periods of organo-mineral fertilizers, as well as the growth stimulator bio-liquid had a certain effect on the germination, growth and development of potatoes, the intensive formation of above-ground and underground organs, compared to the version without fertilization, in the versions that received organomix and growth stimulator. the weight increased by 130-150 grams, the leaves by 38-59 grams, and the number of stolons by 3.4-6.4 pieces, and as a result, providing favorable conditions for the accumulation of potato tubers and increasing the amount of harvest [10].

Although the patterns of effect of the tested fertilizers in the two years of the study were repeated, the level of potato yield in 2022 was higher than in 2021. Thus, if in 2022 the potato harvest in the version without fertilization was 150.0 c/ha, then in 2021 it was 142.4 c/ha, or about 8.0 cents less.

This circumstance is explained by the fact that in 2022, both the amount of atmospheric precipitation (562 mm) and the number of sunny days during tuber accumulation (38) were more favorable for potato growth and development than relatively little precipitation (476 mm) and sunny days. (only 25 solar days during vegetation, especially during tuber accumulation) in 2021.

This circumstance was also confirmed at the level of the Republic of Artsakh, in 2021, as a result of relatively unfavorable climatic conditions, the yield of potatoes decreased significantly, and this decrease was 13.7 c/ha per hectare on average.

Climatic conditions also had a certain impact on the efficiency of fertilizers: in favorable year 2022, the efficiency of organomix, mineral fertilizers and growth promoter was higher than in 2021 with unfavorable climatic conditions (Tab. 1).

Table 1

The effect of organic fertilizers and growth promoters on the amount of potato harvest (2021-2022 average data)

N	Variants	Average yield of repetitions, by years, c/ha		The average yield of two years, c/ha	Extra harvest	
		2021	2022		c/ha	%
1	Checker (without fertilization)	142,4±2	150,0±3	146,2±2,5	-	-
2	Organomix 8t/ha one-time, in sowing	290,0±6	301,0±4	295,5±5,0	149,3	102,1
3	Organomix 10t/ha one-time, in sowing	296,0±7	315,±5	305,5±6	159,3	109,0
4	Organomix 5t (in sowing) $N_{30}P_{40}K_{40}$(in sowing)+) with N_{30} nutrition	300,0±4	307,0±5	303,5±4,5	157,3	107,6
5	Organomix 5t/ha in sowing + organomix 3t/ha (with nutrition) + bio-liquid 14l/ha (nutrition)	307,0±5	322,0±6	313,5±5,5	167,3	114,4
6	Bio-liquid 14 l/ha by wetting the planting material + organomix 5 t/ha (in sowing) + organomix 3 t/ha (nutrition)	342,0±7	372,0±6,2	357,0±6,6	210,8	144,2
7	$N_{80}P_{80}K_{80}$ (in sowing)+ N_{40} (nutrition)	285,0±6	300,0±5,4	292,5±5,7	146,3	100,1
Sx,%		1,5	1,3			
MSD 0,95 g		5,4	4,8			

Thus, if compared to organomix 8 t/ha, organomix 5t/ha + organomix 3t/ha (before wetting the planting material with bio-liquid) and $N_{80}P_{80}K_{80}$+ N_{40} version, the additional harvest of potatoes was 151.0 c/ha, 222.0 c/ha and 150.0 c/ha, in 2021, the additional harvest of potatoes was 147.6 c/ha, 199.6 c/ha, and 142.6 c/ha, i.e., the efficiency of fertilizers in the tested versions in 2022 was 3.7-8.0% was higher than in 2021 with unfavorable climatic conditions.

At the same time, it can be seen from the data in the table that the equivalent doses of organo-mineral fertilizers compared to the version without fertilization almost equally affected the increase in potato yield, but when in the version of fractional application of organomix, the potato planting material was soaked with a bio-liquid solution before sowing, in that version, the average data of two years increased the yield compared to the version without fertilization was the highest and was 210.8 c/ha or 144.2%, even compared to the version where the bio-liquid was given as extra-root nutrition at the stage of potato cocooning, where the crop addition was 167.3 c/ha (114.4%), or by changing the method of application of bio-liquid by soaking the tubers before planting, the difference in yield compared to the application of extra-root nutrition was 43.5 c/ha or 29.8%.

This circumstance once again confirms the fact that the bio-liquid contributed to the sprouting of dormant buds in the base of the potato plant material, which resulted in the formation of more above-ground (stems) and underground (stolons) organs, resulting in increased potato yield.

According to the results of field experiments, it was proved that the fractional application of organomix and mineral fertilizers and their combined equivalent doses had a more beneficial effect on the increase in the number of potato crops compared to the one-time application, if compared to the option without fertilization, if the one-time application of organo-mineral fertilizers provided 146.3-149.3 c/ha crop addition (100.1-102.1%), then their fractional and equivalent joint doses are 157.3-167.3 c/ha or 107.6-114.4%.

From the results of the studies, it can be seen that mineral and organic fertilizers, as well as the use of bio-liquid that promotes growth, had a certain effect on the marketability of the structure of the potato crop and the weight of the marketable tubers (Tab. 2).

Thus, if in the version without fertilization, the marketability of the potato crop (50-100 and 100g and higher tubers) was 65.6%, and the weight of the marketable tubers was 62 grams, then with the effect of applied fertilizers and growth promoters, the marketability of the crop was 80.2-87%, and the weight of marketable tubers 79.6-95.4 grams, or in the options without fertilization, the marketability increased by 14.6-21.4%, and the weight of marketable tubers 17.6-33 with 4 grams.

It is noteworthy that the equivalent doses of organomix and mineral fertilizers and their one-time application equally affected both the quantity and product quality of the potato harvest, as well as the weight of commercial tubers. From the data in tab. 2, it can be seen that from the one-time application of the norm of 8t/ha of organomix and the equivalent doses of mineral fertilizers ($N_{80}P_{80}K_{80}$+N_{40}), the marketability of potatoes provided 81.3 and 81.4%, respectively, and the weight of commercial tubers was 80.4- 80.2 grams. Both in terms of yield, marketability and the weight of marketable tubers, the potato planting material before wetting the seed with bio-liquid and fractional application of organomix (organomix 5 t/ha in sowing + organomix 3 t/ha with nutrition) is considered the best, where a potato harvest of

357.0 c/ha was obtained. marketability 87.0%, and the weight of commercial tubers 95.4 grams.

The difference in climatic conditions during the years of the experimental works also had a certain effect on the structure of the obtained crop.

Table 2

The effect of organic fertilizers and growth promoters on the structure of the potato crop (2021-average data)

N	Variants	The yield of tubers, t/ha	Tubers by fractions,%			Productivity of tubers, %	Weight of commercial tubers, g.
			100g	50-100g	up to 50g		
1	Checker (without fertilization)	146,2±2,5	31,4	34,2	34,4	65,6	62,0
2	Organomix 8t/ha one-time, in sowing	295,5±5,0	43,2	38,1	18,7	81,3	80,4
3	Organomix 10t/ha one-time, in sowing	305,5±6	44,0	38,4	17,6	82,4	82,0
4	Organomix 5t (in sowing) $N_{30}P_{40}$ K_{40}(in sowing)+) with N_{30} nutrition	303,5±4,5	43,2	37,0	19,8	80,2	79,6
5	Organomix 5t/ha in sowing + organomix 3t/ha (with nutrition) + bio-liquid 14l/ha (nutrition)	313,5±5,5	43,9	41,4	14,7	85,3	83,5
6	Bio-liquid 14 l/ha by wetting the planting material + organomix 5 t/ha (in sowing) + organomix 3 t/ha (nutrition)	357,0±6,6	45,2	41,8	13,0	87,0	95,4
7	$N_{80}P_{80}K_{80}$ (in sowing) + N_{40} (nutrition)	292,5±5,7	42,4	39,0	18,6	81,4	80,2

In the favorable year of 2022, compared to the year 2021 with relatively unfavorable climatic conditions, both in the non-fertilized version, the levels of mineral and organic fertilizers and growth promoter effects in the structure of the potato crop are significantly different. If in 2022, the marketability of potatoes in the version without fertilization was 68.2%, the weight of marketable tubers was 63.4 g, then in 2021, those same indicators were 63.0% and 60.6 g, respectively. Compared to 2021, the marketability of potato tubers increased by 2.4-3.0%, and the average weight of commercial tubers increased by 1.9-2.9 g in the favorable year of 2022 in the variants that received organics, mineral fertilizers and growth stimulants. In general, the impact of this or that factor is evaluated not only by the criteria of the wet mass of the crop, but also the index of its dry matter content is also important.

The content of dry matter, starch and ascorbic acid (vitamin C) in potato tubers has an important production and economic significance. In that regard, we paid special attention to the study of the content of dry matter, starch, ascorbic acid (vitamin C) and nitrates in the tubers. According to the research results, it was found that the applied soil conditioners had a significant effect on the content of dry matter, starch, ascorbic acid and nitrates, as well as dry matter and starch content in the tubers (Tab. 3).

According to two-year average data, compared to the version without fertilization, the content of dry matter in potato tubers increased by 2.5-3.2%, the content of starch by 2.1-

3.4%, under the influence of mineral, organic fertilizers and growth promoter and ascorbic acid by 0.3-1.4%. It is noteworthy that the effect of the combined use of organomix and bio-liquid, as well as organomix and mineral fertilizers, has a more beneficial effect on the outcome of the mentioned indicators than the full combination of mineral fertilizers, which is confirmed by literature data [11,12].

Table 3

The effect of organo-mineral fertilizers and growth stimulants on the content and effectiveness of dry matter, starch and vitamin C in potato tubers (average data for 2021-2022)

N	Variants	Dry matter,%	starch ,%	vitamin C , mg %	Outcome, c/ha		Nitrate content, mg/kg
					Dry matter	starch	
1	Checker (without fertilization)	20,3	15,8	9,6	29,7	23,1	75,0
2	Organomix 8t/ha one-time, in sowing	23,1	18,8	10,9	68,2	55,6	115,0
3	Organomix 10t/ha one-time, in sowing	23,3	18,7	10,8	71,2	57,1	170,0
4	Organomix 5t(in sowing) $N_{30}P_{40}$ K_{40} (in sowing)+) N_{30} with nutrition	22,9	18,4	11,0	69,5	55,8	140,0
5	Organomix 5t/ha in sowing+ organomix 3t/ha (with nutrition)+bio-liquid 14l/ha (nutrition)	23,4	18,9	11,0	73,4	59,3	135,0
6	Bio-liquid 14L/ha wetting the planting material + organomix 5t/ha (in sowing)+organomix 3t/ha (nutrition)	23,5	19,2	10,9	83,9	68,5	140,0
7	$N_{80}P_{80}K_{80}$ (in sowing)+ N_{40} (nutrition)	22,8	17,9	9,9	66,7	52,4	190,0

At the same time, it can be seen from the data in the table that although the combined use of organomix and bio-liquid did not have a significant effect on the content of dry matter, starch and ascorbic acid, the content of the mentioned substances increased due to the high yield. If the content of dry matter, starch and vitamin C in the version of one-time use of organomix was 23.1 mg %, 18.8 mg % and 10.9 mg %, respectively, then in the versions of organomix and bio-liquid, this indicator (version 6) was 23.5 %, 19.2% and 10.9%, but due to the high yield, dry matter content per 1 ha increased by 15.7 centners, and starch content by 12.9 centners.

Determination of nitrate content is considered the main indicator of potato quality assessment. It is known that the limit permissible concentration of nitrate content for potatoes grown in the open field is 250 mg in 1 kg of potato tubers.

As shown by the data of the "Soex" nitrate meter, which are given in tab. 3, the potato tubers obtained in our experiments with the use of organomix, mineral fertilizers and bio-liquid despite the comparison with the version without fertilization, where the content of nitrates is 75.0 mg/kg, of all options in the obtained harvest, the content of nitrates increased by 45-115 mg/kg, but everywhere their amount is within the limits of permissible limit concentration (PLC) (Fig. 1).

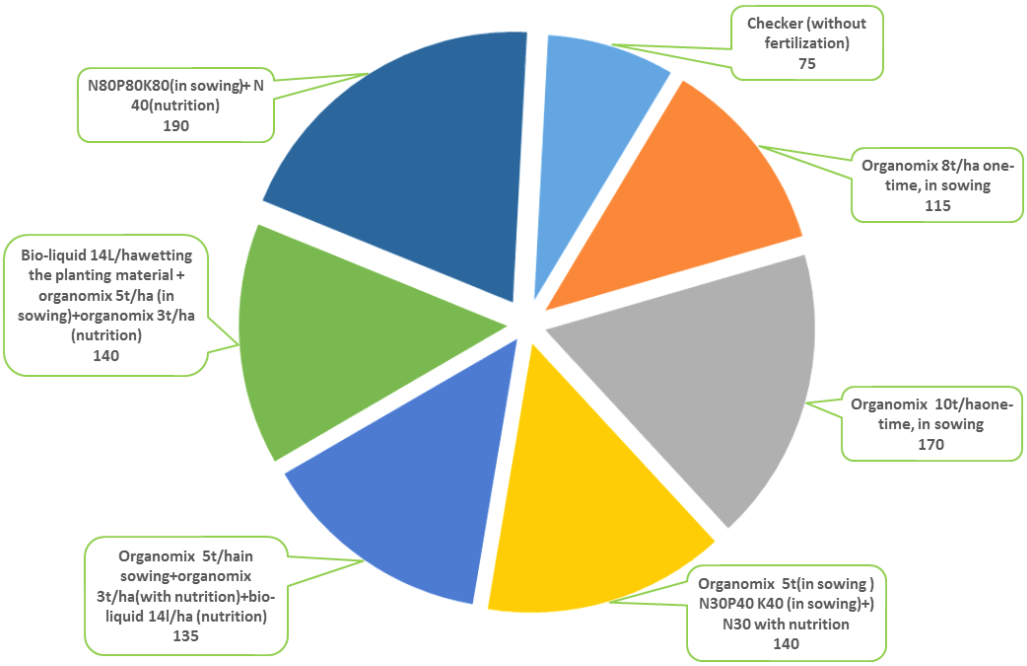

Fig. 1 Nitrate content, mg/kg

In other words, the used fertilizers and growth promoter contributed to the rapid germination of potato planting material, normal growth and development of plants, significantly increased the amount of potato crop cultivated in drought conditions, improved the marketability of tubers and ensured the production of ecologically safe food with high quality characteristics.

Conclusion

In post-forest brown soils of the Askeran region of the Republic of Artsakh, the one-time application of equivalent amounts of organic and mineral fertilizers to potato seedlings grown in drought conditions equally affected the growth, development, yield and marketability of potatoes, while the fractional or combined application of these fertilizers had a more beneficial effect on the aforementioned indicators of potatoes, than their one-time use.

Bio-liquid, as a growth stimulator, contributes to the rapid germination of potato seedlings, normal growth and development of plants. Soaking the tubers with bio-liquid of the same rate before planting significantly increases the amount of potato harvest, improves the marketability of the tubers, increases the content of dry matter and starch, and at the same time ensures ecologically safe high-quality potatoes.

Although in the variants of one-time and fractional application of equivalent doses of organomix and mineral fertilizers, compared to the variant without fertilization, the content of nitrates increased by 45-115 mg/kg, but their amount in the potato crop is within the limits of permissible limit density (PLD).

Due to the limitation and high cost of mineral fertilizers, in case of their absence, fertilize the potato fields with an organomix at the rate of 8t/ha, 60% of which-in sowing and 40%-with nutrition, process the potato planting material in advance (2-3 days before sowing) with a bio-liquid solution 14 l/ha and as a result, in drought conditions, a high-quality potato

harvest of 350-360 c/ha will be provided, which is recommended to be invested in agricultural production.

Reference

1. Egata Shunka Tolessa (2018) Importance, Nutrient Content and Factors Affecting Nutrient Content of Potato. American Journal of Food, Nutrition and Health. Vol. 3, No. 3, 2018.- p. 37-41, http://www.aascit.org/journal/ajfnh
2. Dospehov B.A. Methodology of the field experiment (1973).- p. 336. https://mf.bmstu.ru/info/faculty/lt/caf/lt1/soil_books/uchebnik.pdf
3. Yagodin B.A., Smirnov P.M., Peterburgsky A.V. Agrochemistry (methods of plant and soil analysis) edited by. B.A. Yagodin. 2nd ed. add., M: Agropromizdat, 1989.-p.639.
4. Katarzyna Glen-Karolczyk (2022) Health parameters of potato tubers under the influence of soil applied bio-preparations and bio-stimulants https://doi.org/10.3390/app122211593
5. Marie Jude Merisier, Lotfi Khiari, Léon Etienne Parent, Antoine Karam ORGANO MINERAL PHOSPHATE FERTILIZER AS ALTERNATIVE TO DI-AMMONIUM PHOSPHATE IN POTATO PRODUCTION; SAO PEDRO, SAO PAULO STATE (2013) BRAZIL file:///C:/Users/administrator/Downloads/ag_uso_01_MarieMerisier.pdf
6. Pirkko Roinila (2012) Effects of different organic fertilization practices and mineral fertilization on potato quality https://doi.org/10.1080/01448765.2003.9755260
7. Yearbook of Statistical Service of the Republic of Artsakh (2022) //Stepanakert.- p.367 http://www.stat-nkr.am/hy/2010-11-24-11-18-12/2021-/1344--2021
8. Aleksanyan V.A. Ways of improving the agro-industrial properties of agricultural lands of the NKR (Nagorno Karabakh Republic) (2016) //Stepanakert.- p. 224.
9. Galstyan S.B., Aleksanyan V.A. Soil-protection Agriculture (2018) //Stepanakert Artsakh Scientific Center.- p.176.
10. 1Mirzoyan M.Sh. (2022) The influence of introducing organic nutrients and growth stimulant into the soil in different periods on the growth, development and formation of potato tubers in arid conditions of the foothill zone https://doi.org/10.56243/18294898-2022.4-40
11. Mineev V.G. Biological agriculture (edited by E.N.Mishystin) (1980) //M: Science.- p.116.
12. Mineev V.G. Agrochemistry (2004) //M: p.719. https://myzooplanet.ru/agropochvovedenie-agrohimiya/agrohimiya-uchebnik-izd-pererab-dop-izd-mgu.html

Reference

1. Egata Shunka Tolessa (2018) Importance, Nutrient Content and Factors Affecting Nutrient Content of Potato. American Journal of Food, Nutrition and Health. Vol. 3, No. 3, 2018.- p. 37-41, http://www.aascit.org/journal/ajfnh
2. Доспехов Б.А. (1973) Методика полевого опыта //М: Колос, 1973г.- с.336 https://mf.bmstu.ru/info/faculty/lt/caf/lt1/soil_books/uchebnik9.pdf
3. Ягодин Б.А., Смирнов П.М., Петербургский А.В. (1989) Агрохимия (методы растительных и почвенных анализов) Под ред. Б.А. Ягодина. 2-е изд. доп., М: Агропромиздат, 1989 г.- с 639.
4. Katarzyna Glen-Karolczyk (2022) Health parameters of potato tubers under the influence of soil applied bio-preparations and bio-stimulants https://doi.org/10.3390/app122211593

5. Marie Jude Merisier, Lotfi Khiari, Léon Etienne Parent, Antoine Karam ORGANO MINERAL PHOSPHATE FERTILIZER AS ALTERNATIVE TO DI-AMMONIUM PHOSPHATE IN POTATO PRODUCTION; SAO PEDRO, SAO PAULO STATE (2013) BRAZIL file:///C:/Users/administrator/Downloads/ag_uso_01_MarieMerisier.pdf
6. Pirkko Roinila (2012) Effects of different organic fertilization practices and mineral fertilization on potato quality https://doi.org/10.1080/01448765.2003.9755260
7. ԱՀ վիճակագրական ծառայության տարեգիրք (2022) //Ստեփանակերտ, էջ 215-222 http://www.stat-nkr.am/hy/2010-11-24-11-18-12/2021-/1344--2021
8. Ալեքսանյան Վ.Ա. ԼՂՀ գյուղատնտեսական նշանակության հողերի ագրոարտադրական հատկությունները բարելավման ուղիները (2016) //Ստեփանակերտ.- էջ 224:
9. Գալստյան Ս.Բ., Ալեքսանյան Վ.Ա. Հողապաշտպան երկրագործություն (2018) //Ստեփանակերտ Արցախի գիտական կենտրոն:
10. Mirzoyan M.Sh. (2022) The influence of introducing organic nutrients and growth stimulant into the soil in different periods on the growth, development and formation of potato tubers in arid conditions of the foothill zone https://doi.org/10.56243/18294898-2022.4-40
11. Минеев В.Г (1980) Биологическое земледелие (под ред. Е.Н. Мишыстина) //М: Наука.- с. 116.
12. Минеев В.Г. (2004) Агрохимия //М: Колос.- с 719. https://myzooplanet.ru/agropochvovedenie-agrohimiya/agrohimiya-uchebnik-izd-pererab-dop-izd-mgu.html

ՕՐԳԱՆԱՀԱՆՔԱՅԻՆ ՊԱՐԱՐՏԱՆՅՈՒԹԵՐԻ ԵՎ ԱՃԻ ԽԹԱՆԻՉԻ ԿԻՐԱՌՄԱՆ ՏՆՏԵՍԱԷԿՈԼՈԳԻԱԿԱՆ ԱՐԴՅՈՒՆԱՎԵՏՈՒԹՅԱՆ ՈՐՈՇՈՒՄԸ ՆԱԽԱԼԵՌՆԱՅԻՆ ԳՈՏՈՒ ՊԱՅՄԱՆՆԵՐՈՒՄ ՄՇԱԿՎՈՂ ԿԱՐՏՈՖԻԼԻ ՑԱՆՔԵՐՈՒՄ

Ալեքսանյան Վ.Ա.[1], Միրզոյան Մ.Շ.[1], Գալստյան Ս.Բ.[1], Գալստյան Մ.Հ.[2]
[1]Շուշիի տեխնոլոգիական համալսարան
[2]ՀՀ էկոնոմիկայի նախարարության երկրագործության գիտական կենտրոն

Հոդվածում ներկայացված է ԱՀ Ասկերանի շրջանի հետանտառային շագանակագույն հողերում, անջրդի պայմաններում աճեցվող կարտոֆիլի դաշտերում օրգանահանքային պարարտանյութերի և աճի խթանիչի կիրառման ազդեցությամբ կարտոֆիլի բերքի քանակի, ապրանքայնության և որակական ցուցանիշների կրած փոփոխությունների վերաբերյալ կատարված ուսումնասիրությունների արդյունքները:

Երկամյա հետազոտություններով բացահայտվել է, որ չնայած օրգանական և հանքային պարարտանյութերի համարժեք չափաքանակների միանվագ կիրառությունը հավասարապես է ազդել կարտոֆիլի բերքի քանակի, ապրանքայնության և որակական ցուցանիշների վրա, սակայն այդ պարարտանյութերի կոտորակային կամ համատեղ կիրառությունը առավել բարերար է ազդել կարտոֆիլի նշված ցուցանիշների վրա, քան դրանց միանվագ կիրառությունը: Պարզվել է, որ օրգանոմիքսի և հանքային պարարտանյութերի համարժեք չափաքանակների միանվագ և կոտորակային, ինչպես նաև կենսահեղուկի կիրառման տարբերակներում, առանց պարարտացման տարբերակի համեմատությամբ, նիտրատների պարունակությունը ավելացել է 45-115 մգ/կգ-ով, սակայն դրանց քանակությունը կարտոֆիլի բերքում գտնվում է սահմանային թույլատրելի խտության շրջանակներում: Հանքային պարարտանյութերի սահմանափակության և

թանկության պատճառով, կարտոֆիլի դաշտերը պարարտացնել 8 տ/հա նորմայով օրգանոմիքսով, որի 60%-ը՝ ցանքակից և 40%-ը սնուցմամբ, նախապես կարտոֆիլի տնկանյութը 2-3 օր ցանքից առաջ թրջել կենսահեղուկի (14 լ/հա նորմայով) լուծույթով և արդյունքում կապահովվի 350-360 ց/հա կարտոֆիլի բերք՝ օսլայի և ասկորբինաթթվի (վիտամին C) բարձր պարունակությամբ, որն էլ առաջարկվում է ներդնել գյուղատնտեսական արտադրությունում:

Բանալի բառեր. օրգանոմիքս, հանքային պարարտանյութ, կենսահեղուկ, կարտոֆիլ, չոր նյութ, օսլա, նիտրատներ:

ОПРЕДЕЛЕНИЕ ХОЗЯЙСТВЕННО-ЭКОЛОГИЧЕСКОЙ ПРОДУКТИВНОСТИ ОРГАНО-МИНЕРАЛЬНЫХ УДОБРЕНИЙ И ПРИМЕНЕНИЯ СТИМУЛЯТОРОВ РОСТА В ПОСЕВАХ ВОЗДЕЛЫВАЕМОГО КАРТОФЕЛЯ В УСЛОВИЯХ ПРЕДГОРНОЙ ЗОНЫ

Алексанян В.А.[1], Мирзоян М.Ш.[1], Галстян С.Б.[1], Галстян М.А.[2]
[1]*Шушинский технологический университет*
[2]*Научный центр земледелия министерства экономики РА*

В статье представлены результаты исследований по изменению количества, качества продукции и качественных показателей урожая картофеля под влиянием применения органо-минеральных удобрений и стимуляторов роста на постлесных бурых почвах Аскеранского района в картофельные поля, выращенные в засушливых условиях. Двухлетними исследованиями установлено, что хотя разовое внесение эквивалентных количеств органических и минеральных удобрений в равной степени влияло на количество, качество продукции и качественные показатели урожая картофеля, дробное или комбинированное внесение этих удобрений оказывало более благотворное влияние на урожай картофеля, указанных показателей картофеля, чем их разовое применение.

Выявлено, что при разовом и дробном внесении органических и минеральных удобрений, а также вариантов внесения биожидкости по сравнению с вариантом без внесения удобрений содержание нитратов увеличивается на 45-115 мг/сут. кг, но их количество в урожае картофеля находится в рамках ограниченно допустимой плотности.

В связи с ограниченностью и дороговизной минеральных удобрений удобрить картофельные поля органической смесью из расчета 8 т/га, из которых 60% из семян и 40% из подкормки, посадочный материал картофеля предварительно замочить раствором биожидкости (14 л/га) за 2-3 дня до посева и в результате будет обеспечен урожай картофеля 350-360 ц/га с высоким содержанием крахмала и аскорбиновой кислоты, который предлагается вкладывать в сельскохозяйственное производство.

Ключевые слова: органомикс, минеральное удобрение, биожидкость, картофель, сухое вещество, нитраты, крахмал.

Submitted on 07.03.2023
Sent for review on 09.03.2023
Guaranteed for printing on 28.04.2023

Bulletin Of High Technology N1(25) 2023.-pp. 59-66.

UDC - 004.725:004.852

RESEARCH OF ALGORITHM FOR EXPANDING THE DATABASE OF TRAINING DATASETS OF A GENERATIVE-ADVERSARIAL NETWORK

Robert G. Hakobyan
National Polytechnic University of Armenia
105 Teryan St. 0009, Yerevan
rob.hakonyan@polutechnic.am
ORCID iD: 0000-0002-6919-2106
Republic of Armenia

Timur V. Jamgharyan
National Polytechnic University of Armenia
105 Teryan St. 0009, Yerevan
t.jamgharyan@yandex.ru
ORCID iD: 0000-0002-9661-1468
Republic of Armenia

https://doi.org/10.56243/18294898-2023.1-59

Abstract

The paper presents the results of *calculations and tests of the* developed dataset expanding algorithm for training a generative-adversarial network. The research was conducted on two types of malicious software: mimikatz and cring. The boosting method was chosen as a method for expanding the database of datasets.

The process of expanding the database of datasets was carried out in a granular manner, *using timestamps.* Simulation of the algorithm operation at different iterations and visualization of the results have been carried out.

Key words: augmentation, boosting, training set, machine learning, weight coefficient, datasets, classification feature, mimikatz.

Introduction

An important place is occupied by the construction of a multi-level complementary security system to the operation of the network infrastructure. An important element of the network and infrastructure security architecture is an intrusion detection system (IDS).Various researchers and scientific communities are conducting research on the creation of an intrusion detection system based on generative-adversarial networks [1-4].

Generative-Adversarial Network (GAN) is an algorithm based on a combination of two neural networks one of which generates an object and the other tries to distinguish correct («real») objects from incorrect ones. The generating network G (generator) creates (generates) objects of a specified structure, the discriminating network D (discriminator) draws

conclusions about the similarity of the generated and true objects [5]. Concept of generative-adversarial networks was invented by Ian Goodfellow in 2014.

The problems of using the generative adversarial network and the whole concept of machine learning as a tool for detecting an attack on the Infrastructure are little explored.

It is necessary to distinguish that the generation of malicious software (software) using a GAN is a difficult task, due to the fact that both malicious and non-malicious software are implemented on the basis of a single software code base. Research is currently underway to generate «synthetic» training datasets for a GAN. Various researchers are conducting research on the research of methods and ways of preparing data, as well as creating methods for training a GAN to generate «synthetic» datasets of malware and detect it. In particular, ML researchers widely use the data augmentation method to create «synthetic» datasets (augmentation - is an increase in the data sample for training through the modification of existing data [6]).

The relevance of the research is due to the continuous improvement of the means and methods of attacks on the network infrastructure (NI), including the use of ML. The conditions for a successful attack on the Infrastructure using ML are considered in [7]. A substantive research was done on the introduction of certain data sets of malicious traffic into unencrypted VoIP traffic (Voice over IP, VoIP).

The choice of Internet telephony traffic as a transport for malware is due to several factors:

- the semantic content of telephone traffic is a priori unknown, which makes it difficult to analyze it even with «standard» IDS,
- traffic patterns allow an attacker to enter false data that is difficult to detect by IDS.

The scientific novelty of the research lies in the research of the possibility of creating malware traffic datasets with granular control of the augmentation process. The boosting method is used as a tool for increasing datasets.

Conflict Setting

It is necessary to carry out a quantitative change (expansion of the base) of training datasets for a generative-adversarial network without changing their quality.

Research Results

The importance of the ideas of "independence" and "freedom" is also evidenced by the

It is necessary to develop and programmatically implement an algorithm that will granularly expand training datasets for training GAN.

$$f_m(x) \cong f`_m(x) \quad (1)$$

where $f_m(x)$-original dataset, $f_m^{`}(x)$-final dataset.

Border conditions: $N \geq \varepsilon$, (ε-epoch number), sign > 0, parameters and attributes of augmented datasets must be within the protocol.

For the correct operation of the algorithm and software, the following datasets are pre-formed.

1. **Initial dataset**. It is formed on the basis of VoIP telephony traffic operating over the SIP (Session Initiation Protocol, SIP) and RTP (Realtime Transport Protocol, RTP) protocols. As a software for capturing network traffic, a modified low-level library based was used the open source solution *tcpdump*.
2. **Training dataset.** Generated on the basis of the initial dataset by injecting malicious software obtained from open sources into it (was used *mimikatz* and *cring* malware from sources [8,9]).
3. **Test dataset**. Formed on the basis of a training dataset, but with a fixed value for both the type of malware and its percentage. Checked on online resources [10].Those datasets with embedded malware that are classified on the resources as malicious were not used in the training of the GAN (since they were detected by standard protection tools).
4. **Validation dataset.** It is formed on the basis of the initial and test, as well as on the basis of the initial and training data sets, XOR addition of these data types.

For each dataset, a signature calculation procedure was carried out (by the hashing method).

The developed algorithm is shown in Fig.1.

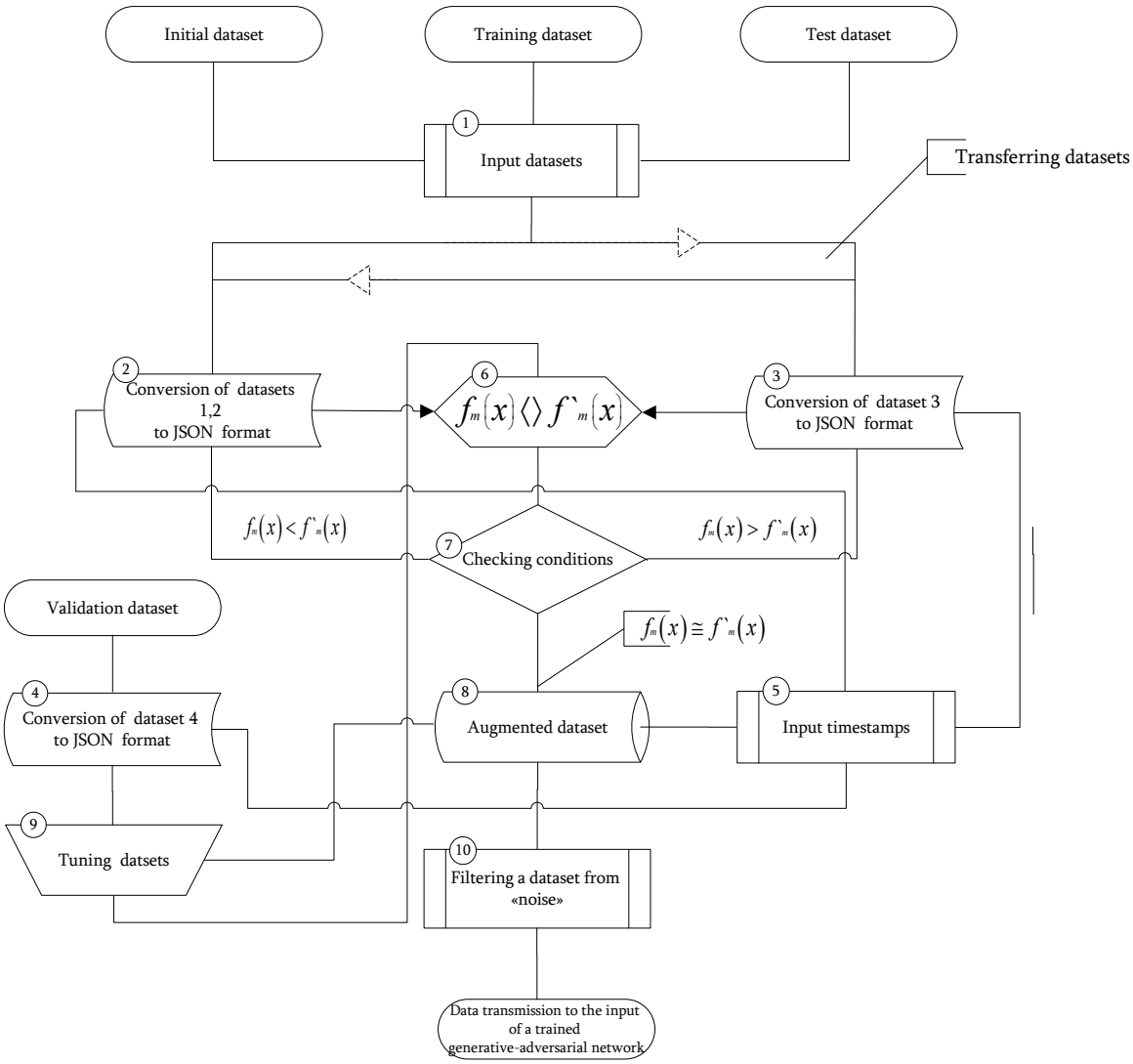

Fig. 1 The algorithm of the software for granularly expanding training datasets for GAN

Algorithm operation

step 1 splitting into blocks of input datasets,
step 2,3,4 conversions to JSON format (Java Script Object Notation, JSON), initial (dataset 1), training (dataset 2), test (dataset 3) and validation (dataset 4) datasets,
step 5 setting the boosting time interval,
step 6 dataset augmentation,
step 7 checking the conditions for executing the augmentation algorithm,
step 8,9 verification of the augmented data set and adjustment based on the validation dataset. Implemented the ability to «track» the state of datasets at a given point in time based on timestamps,
step 10 filtering the augmented data set from «noise».

Processing, transformation and augmentation of input datasets (block 6 of the algorithm) is implemented on the basis of the «recurrent neural network with attention» (RNN) mechanism. The scheme of augmentation of datasets based on a RNN is shown in Fig. 2. Visualized results of generating datasets are is shown in Fig. 3-4.

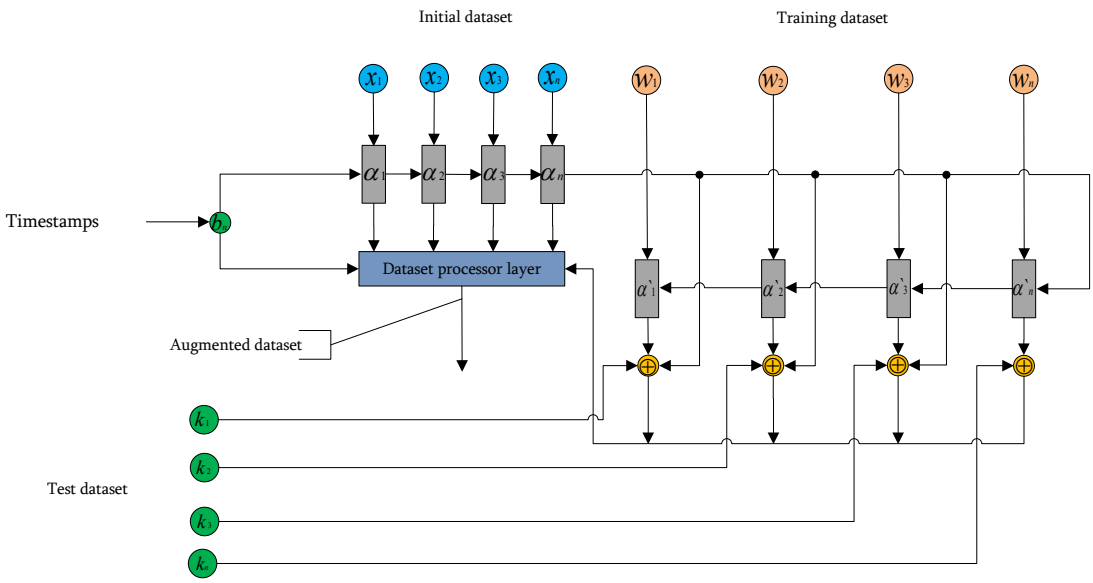

Fig. 2 ***Dataset augmentation mechanism based RNN***

where: $k_1....k_n$ test dataset, $x_1....x_n$ initial dataset, $w_1....w_n$ training dataset, $b_1....b_n$ timestamp hash values, $\alpha_1....\alpha_n$ coefficients (weights) of the primary boosting algorithm, $\alpha`_1....\alpha`_n$ biased coefficients (weights) of the boosting algorithm.

«Quality datasets» - are augmented datasets with embedded malware that have been tested on the virus total resource and not detected by the resource monitoring systems as malicious software.

Recurrent neural network with attention (attention mechanism) - is a technique used in recurrent neural networks and convolutional neural networks to search for relationships between different parts of the input and output data.

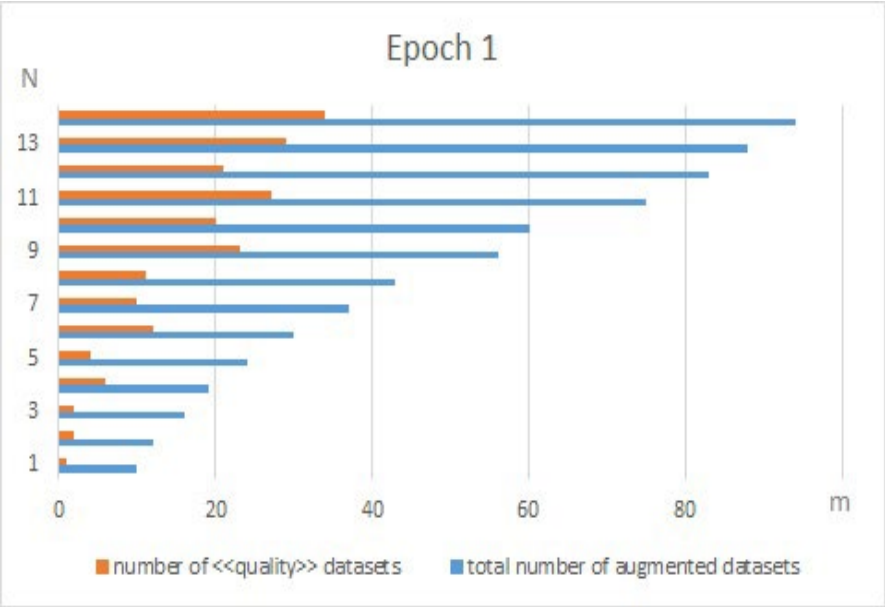

Fig. 3 Number of generated datasets and number of «quality» datasets (epoch 1)

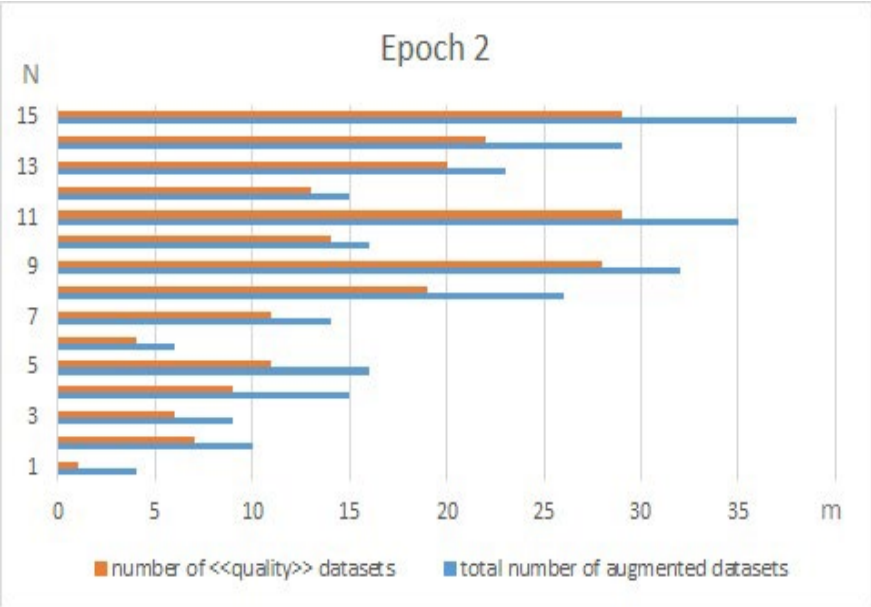

Fig. 4 Number of generated datasets and number of «quality» datasets (epoch 2)

Used software and hardware

1. The hash function was SHA-1 (Secure Hash Algorithm, SHA),
2. The calculations were performed on the Dell Power Edge T-330 server,
3. The open source platform asterisk was used as a VoIP telephony server,
4. The research was conducted in a virtual environment based on the Windows Server 2016 operating system with the preinstalled Hyper-V role,
5. The developed software is implemented in the python programming language in the PyCharm development environment.

An increase in boosting iterations and a timestamp value leads to an increase in the number of generated data sets, but these datasets are of little use for training a generative

adversarial network, as they are detected even by «standard» intrusion detection systems as malware.

An increase in the number of training epochs has a positive effect on the «quality» of the generated data sets, since with an increase in the training epoch, the number of generated and «quality» data sets practically coincides. As a disadvantage, it should be noted that an increase in the number of epochs, increasing the «quality» of the generated datasets, increases their «noisiness».

An important requirement for training a neural network is to ensure that the training set is balanced.

The use and input of a timestamp into the set of training datasets made it possible to granularly detect the moment of «retraining» of the generative-adversarial network.

Only datasets that have been filtered from «noise» are suitable for practical use.

The developed algorithm and software allows, in the presence of the source code of various malicious software, to create training data for an intrusion detection system based on ML, increasing the protection of NI.

The initial data of the dataset 1, part of the source code of the developed software and third-party libraries are presented in the repository to [11].

Conclusion

An increase in the number of training epochs has a positive effect on the «quality» of augmented datasets, since with an increase in the training epoch, the number of generated and «quality» datasets practically coincides. As a disadvantage, it should be noted that increasing the number of epochs and increasing the «quality» of augmented data sets increase their «noisiness». The use and input of a timestamp into the set of training datasets made it possible to granularly detect the moment of «overfitting» of the generative-adversarial network. The developed algorithm and software allow, in the presence of the source code of various malicious software, to create training data for an intrusion detection system based on machine learning by increasing the protection of the network infrastructure.

References

1. J.Chan, Y.Zhao, Q.Li, X.Feng, K Xu, FeDDeF: Defence Against Gradient Leakage in Federated Learning-based Network Intrusion Systems. [Online].Available: https://arxiv.org/abs/2210.04052
2. S.Das, FGAN: Federated Generative Adversarial Networks for Anomally Detection in Network Traffic
[Online].Available: https://arxiv.org/abs/2203.11106
3. Y. Cui, W.Shen, J.Zhang, W.Lu, L.Sun, S.Chen, Usung EBGAN for Anomally Intrusion Detection
[Online].Available: https://arxiv.org/abs/2206.10400
4. Z.Zhi lin, T.D. Pike, A Hypergraph-Based Mashine Learning Ensemble Network Intrusion Detection System. [Online].Available: https://arxiv.org/abs/2211.03933
5. Ian J.Goodfellow,J.Pouget-Abadie, M. Mirza, B.Xu, D.Warde-Farley,S.Ozair, A. Courville,Y.Bengio. Generative Adversarial Networks. [Online]. Available: https://arxiv.org/abs/1406.2661

6. Z.Yuan, Z.Zhao, Y/Liu, X.Zhang, X.Hou. RPN: A Word Vector Level Data Augmentataion Algorithm in Deep Learning for Language Understanding. [Online].Available: https://arxiv.org/abs/2212.05961
7. T.V. Jamgharyan, V. H. Ispiryan. Model of Generative Network Attack, CSIT Conference 2021, Yerevan, Armenia,// (2021, September 27-October 1), [Online].Available: https://csit.am/2021/proceedings/IS/IS_3.pdf
8. Mimikatz software [Online].Available: https://github.com/search?q=mimikatz
9. Internet resource dedicated to encryption viruses https://id-ransomware.blogspot.com/2021/01/cring-ransomware.html
10. Internet resource for checking various types of malicious files. [Online].Available: https://www.virustotal.com/gui/home/upload
11. Programmatic learning source code and full research results [Online].Available: https://github.com/T-JN/Research-of-Algorithm-for-Expanding-the-Database-of-Training-Datasets-of-a-GAN

References

1. J.Chan, Y.Zhao, Q.Li, X.Feng, K Xu, FeDDeF: Defence Against Gradient Leakage in Federated Learning-based Network Intrusion Systems. [Online].Available: https://arxiv.org/abs/2210.04052
2. S.Das, FGAN: Federated Generative Adversarial Networks for Anomally Detection in Network Traffic, [Online].Available: https://arxiv.org/abs/2203.11106
3. Y. Cui, W.Shen, J.Zhang, W.Lu, L.Sun, S.Chen, Usung EBGAN for Anomally Intrusion Detection [Online].Available: https://arxiv.org/abs/2206.10400
4. Z.Zhi lin, T.D. Pike, A Hypergraph-Based Mashine Learning Ensemble Network Intrusion Detection System. [Online].Available: https://arxiv.org/abs/2211.03933
5. Ian J.Goodfellow,J.Pouget-Abadie, M. Mirza, B.Xu, D.Warde-Farley,S.Ozair, A. Courville,Y.Bengio. Generative Adversarial Networks. [Online]. Available: https://arxiv.org/abs/1406.2661
6. Z.Yuan, Z.Zhao, Y/Liu, X.Zhang, X.Hou. RPN: A Word Vector Level Data Augmentataion Algorithm in Deep Learning for Language Understanding. [Online].Available: https://arxiv.org/abs/2212.05961
7. Timur V. Jamgharyan, Vahe H. Ispiryan. Model of Generative Network Attack, CSIT Conference 2021, Yerevan, Armenia,// (2021, September 27-October 1), [Online].Available: https://csit.am/2021/proceedings/IS/IS_3.pdf
8. Программное обеспечение mimikatz [Online].Available: https://github.com/search?q=mimikatz
9. Интернет ресурс посвященный вирусам-шифровальщикам https://id-ransomware.blogspot.com/2021/01/cring-ransomware.html
10. Интернет ресурс проверки различного типа вредоносных файлов. https://www.virustotal.com/gui/home/upload
11. Исходный код программного обучения и полные результаты исследования https://github.com/T-JN/Research-of-Algorithm-for-Expanding-the-Database-of-Training-Datasets-of-a-GAN

Bulletin Of High Technology N1(25) 2023.-pp. 59-66.

R.G. Hakobyan, T.V. Jamgharyan

ԳԵՆԵՐԱՏԻՎ-ՄՐՑԱԿՑԱՅԻՆ ՑԱՆՑԻ ՈՒՍՈՒՑՄԱՆ ՀԱՄԱՐ ՏՎՅԱԼՆԵՐԻ ՀԱՎԱՔԱԾՈՒՆԵՐԻ ՀԵՆՔԻ ԸՆԴԼԱՅՆՄԱՆ ՀԱՇՎԵԿԱՐԳԻ ՀԵՏԱԶՈՏՈՒՄ

Հակոբյան Ռ.Գ., Ջամղարյան Թ.Վ.
Հայաստանի ազգային պոլիտեխնիկական համալսարան

Հոդվածում ներկայացված են գեներատիվ-մրցակցային ցանցի ուսուցման համար տվյալների հավաքածուների հենքի ընդլայնման մշակված հաշվկարգի հետազոտության արդյունքները: Հետազոտությունն իրականացվել է երկու տեսակի վնասաբեր ծրագրային ապահովման ելակետային կոդի հիման վրա՝ mimikatz-ի և cring-ի: Որպես հավաքածուների հենքի ընդլայնման մեթոդ ընտրվել է բուսթինգը: Տվյալների հավաքածուների ընդլայնման գործընթացն իրականացվել է հատիկավոր եղանակով՝ օգտագործելով ժամանակի պիտակները: Իրականացվել է ալգորիթմի գործողության մոդելավորում տարբեր կրկնություններում և արդյունքների արտացոլում:

Բանալի բառեր. աուգմենտացիա, բուսթինգ, գեներատիվ-մրցակցային ցանց, ուսուցման հավաքածու, տվյալների հավաքածու, մեքենայական ուսուցում:

ИССЛЕДОВАНИЕ АЛГОРИТМА РАСШИРЕНИЯ БАЗЫ ОБУЧАЮЩИХ НАБОРОВ ДАННЫХ ДЛЯ ГЕНЕРАТИВНО-СОСТЯЗАТЕЛЬНОЙ СЕТИ

Акопян Р.Г., Джамгарян Т.В.
Национальный политехнический университет Армении

В статье представлены результаты исследований алгоритма расширения базы наборов данных для обучения генеративно-состязательной сети. Исследование проводилось на двух типах зловредного программного обеспечения mimikatz и cring. В качестве метода расширения базы наборов данных выбран метод бустинга *(процедура последовательного построения композиции алгоритмов машинного обучения)*.

Процесс расширения наборов данных был выполнен гранулярным способом с использованием меток времени. Проведено моделирование работы алгоритма при разных итерациях и визуализация результатов.

Ключевые слова: аугментация, бустинг, генеративно-состязательная сеть, обучающая выборка, набор данных, машинное обучение.

Submitted on 25.04.2022
Sent for review on 26.04.2022
Guaranteed for printing on 28.04.2023

Bulletin Of High Technology N1(25) 2023.-pp. 67-80.

O.N. Gasparyan, V.H. Ispiryan, G.A. Melkonyan, T.A. Simonyan

UDC - 623.746.4:62-503.55

ROBUSTNESS ANALYSIS OF UAVS' CONTROL SYSTEMS IN CASE OF MOTORS' PARTIAL EFFICIENCY DEGRADATION

Oleg N. Gasparyan
National Polytechnic University of Armenia
105 Teryan St. 0009, Yerevan
ogasparyan@polytechnic.am
ORCID iD: 0000-0003-2062-4147
Republic of Armenia

Vahe H. Ispiryan
National Polytechnic University of Armenia
105 Teryan St. 0009, Yerevan
vaheispiryan4@gmail.com
ORCID iD: 0000-0002-0710-8634
Republic of Armenia

Gohar A. Melkonyan
National Polytechnic University of Armenia
105 Teryan St. 0009, Yerevan
goharik-melqonyan@mail.ru
ORCID iD: 0000-0003-2949-4588
Republic of Armenia

Tariel A. Simonyan
National Polytechnic University of Armenia
105 Teryan St. 0009, Yerevan
simonyantariel07@gmail.com
ORCID iD: 0000-0001-7519-8558
Republic of Armenia

https://doi.org/10.56243/18294898-2023.1-67

Abstract

Multirotor unmanned aerial vehicles (UAVs) are widely used in military tasks, as well as in various civilian areas such as agriculture, search and rescue operations, detection of fires in forests, traffic monitoring, etc. In real flights of the UAVs some unexpected situations may occur bringing to failures of various elements or devices of the UAV's control system. This, in turn, can lead to the crush and complete collapse of the entire vehicle. First of all, it concerns the DC motors and propellers, which, as opposed to electronic devises and sensors, cannot be duplicated. A method of analysis of robustness of UAV's control systems with respect to possible partial efficiency degradation of motors is proposed in the paper. The ultimately allowable efficiency degradation is determined by a simple graphical procedure on

the complex plane of the Nyquist hodographs of the system's separate channels. A numerical example illustrating the proposed method of analysis of the UAV's control system robustness is given.

Key words: multirotor UAV, motors efficiency degradation, multivariable control system, additive uncertainty, robustness.

Introduction

Multicopters, or N -rotor copters, also called multirotor unmanned aerial vehicles (UAV), are widely used in various military, search and rescue, and other civilian fields including: road traffic monitoring; detection of fires in forests; monitoring the technical condition of buildings, railways and roads; technical support in agricultural works and geological exploration, etc. [1-3].

In real flights of the UAVs some unexpected situations may occur bringing to failures of various elements or devices of the UAV's control system. This, in turn, can lead to the crush and complete collapse of the aerial vehicle. Therefore, the safety and survivability of UAVs are nowadays of paramount importance. Especially, it concerns the tasks carried out in urban areas, since any failure or fault occurred in a UAV may not only bring to its crash, but also cause damage in its surroundings and even expose human beings to injury risks.

That is why the so-called fault-tolerant control systems of UAVs have attracted much interest among researchers in recent years [4, 5]. Many advanced control methodologies have been proposed to overcome the problem of elements' failures, including optimal control, model predictive control, model reference and L_1 adaptive control [6], sliding mode control and some others. Most of these methodologies bring to complicated technical solutions and are very rarely used in practice.

Another widely used and effective approach to solving the problem is based on methods of robust control [7, 8]. These methods allow engineers to develop systems that are rather simple in practical realization but can tolerate, to a certain extent, efficiency degradation (not complete failure) of some systems' elements.

It should be noted here that the problem of failures of UAV's control system elements primarily concerns the direct current (DC) motors and propellers, which, as opposed to electronic devises and sensors, cannot be duplicated.

A method of analysis of robustness of UAV's control systems with respect to possible partial efficiency degradation of motors is proposed in the paper. The ultimately allowable efficiency degradation is determined by a simple graphical procedure on the complex plane of the Nyquist hodographs of the system's separate channels. A numerical example illustrating the proposed method of analysis of the UAV's control system robustness is given.

Rigid-Body Dynamics of UAVs.

In this section, we consider rigid-body dynamics equations of multirotor UAVs [6,9]. Let {I} denotes a right-hand inertial frame with axes x_I, y_I, z_I, and {B}, a body-fixed frame with axes x_B, y_B, z_B aligned along principal axes of inertia (Fig. 1). The position of the center

of mass of the UAV in the inertial frame {I} is given by the vector $\xi = (x, y, z)^T \in \{I\}$, and the orientation of frame {B} with respect to {I} is described by the orthogonal rotation matrix [6]

$$R = \begin{bmatrix} \cos\psi\cos\theta - \sin\phi\sin\psi\sin\theta & -\cos\phi\sin\psi & \cos\psi\sin\theta + \cos\theta\sin\phi\sin\psi \\ \cos\theta\sin\psi + \cos\psi\sin\phi\sin\theta & \cos\phi\cos\psi & \sin\psi\sin\theta - \cos\psi\cos\theta\sin\phi \\ -\cos\phi\sin\theta & \sin\phi & \cos\phi\cos\theta \end{bmatrix} \quad (1)$$

The transition from {I} to {B} is done by the subsequent rotations by Z-X-Y Euler angles denoted, respectively, ψ (yaw), ϕ (roll), and θ (pitch), which can be combined into a pseudo-vector $\eta = [\phi, \theta, \psi]^T$.

Let us denote m the mass of the UAV, g, the gravitational constant, J, the constant inertia tensor of the UAV expressed in {B}, $\omega = [\omega_x, \omega_y, \omega_z]^T \in \{B\}$, the angular velocity of {B} with respect to {I}, J_R, the identical inertias of N rotors, $\Omega_i \ (i = 1, 2, \ ..., N)$, the angular velocities of the rotors.

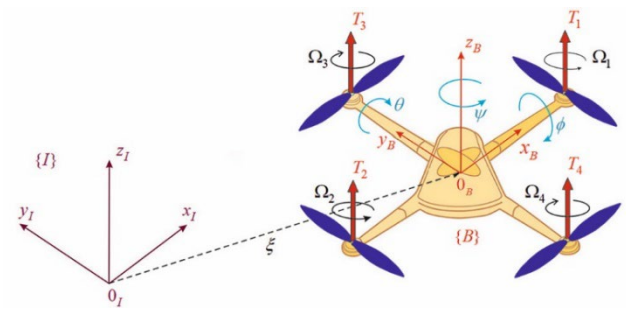

Fig. 1 Schematic representation of the UAV (for $N = 4$)

Then the standard nonlinear equations of motion of the N-rotor UAV can be written in the form [6], [9]:

$$m\frac{d^2\xi}{dt^2} = -mgz_I + RF, \quad (2)$$

$$J\frac{d\omega}{dt} + \omega \times \left(J\omega + \Upsilon_R\Omega\right) = \tau, \quad (3)$$

$$\frac{d\eta}{dt} = P(\eta)\omega, \quad (4)$$

where $\gamma_R = [0\ 0\ J_R]^T$, Ω denotes the total angular velocity of the rotors:

$$\Omega = \sum_{i=1}^{N} (-1)^{i-1}\Omega_i, \quad (5)$$

and the matrix $P(\eta)$ in the strapdown equation (4) is equal to

$$P(\eta)=\begin{bmatrix} \cos\theta & 0 & -\sin\theta \\ \sin\theta\ \mathrm{tg}\phi & 1 & \cos\theta\,\mathrm{tg}\phi \\ \sin\theta/\cos\phi & 0 & \cos\theta/\cos\phi \end{bmatrix} \tag{6}$$

The vectors F, $\tau=[\tau_x,\tau_y,\tau_z]^T\in\{B\}$ in the equations (2), (3) combine the principal non-conservative forces and moments applied to the UAV airframe by the aerodynamics of the N rotors (assuming, for simplicity, no external disturbances). Each ith rotor generates a thrust T_i which is proportional to the square of angular velocity Ω_i (i.e. $T_i=c_T\Omega_i^2$, $c_T>0$) and acts along the body-fixed axis z_B. Denoting the total thrust at hover by T_Σ ($T_\Sigma=\sum_{i=1}^{N}T_i$), and by $\bar{T}$, the N-dimensional vector of thrusts T_i ($\overline{T=}\ [T_1,T_2,\dots T_N]^T$), the mapping of $\bar{T}$ to the vector $[T_\Sigma,\tau]^T$ can be written, generally, in matrix form

$$\begin{bmatrix} T_\Sigma \\ \tau \end{bmatrix}=D_M\Lambda_M\bar{T}, \tag{7}$$

$$\Lambda_M=diag\{\lambda_i^M\}$$

where the $4\times N$ full-rank numerical matrix D_M (often called a control allocation matrix) depends on the UAV geometry, number of rotors N, etc. [6], and λ_i^M $(0<\lambda_i^M\le 1)$ are the motors' (unknown, but constant) degradation parameters. For properly functioning motors, the matrix Λ_M is equal to the identity matrix I (or $I_{N\times N}$, to indicate the order N of the matrix I). Note that we exclude here the case $\lambda_i^M=0$ for any i, which corresponds to complete failure of the i-th motor.

Given the needed controls T_Σ and τ, the equation (7) allows computing the required thrusts T_i (or, which is equivalent, the velocities Ω_i) of rotors. For $N=4$, it can be done, assuming $\Lambda_M=I$, by inverting the matrix B_M, and the Moore-Penrose pseudoinverse should be used for $N=6$ or $N=8$ [9].

Conventional Control System of UAVs

Irrespective of the number of rotors N, the flight altitude z and the vector of rotations $\eta=[\phi,\theta,\psi]^T$ are usually chosen as four control variables in the underactuated control systems of the UAVs, where their motion of along the inertial axis z_i is described, based on (1), (2), and (7), by the following scalar equation:

$$m\frac{d^2z}{dt^2}=(\cos\phi\cos\theta)u_z-mg,$$

or (8)

$$\frac{d^2 z}{dt^2} = \frac{\cos\phi\cos\theta}{m} u_z - g \quad (u_z = T_\Sigma).$$

The block diagram of the UAV's nonlinear control system can schematically be depicted in the form presented in Fig. 2, where we admit a slight abuse of notations combining in the same block diagram the time-domain signals and the Laplace domain transfer functions and matrices.

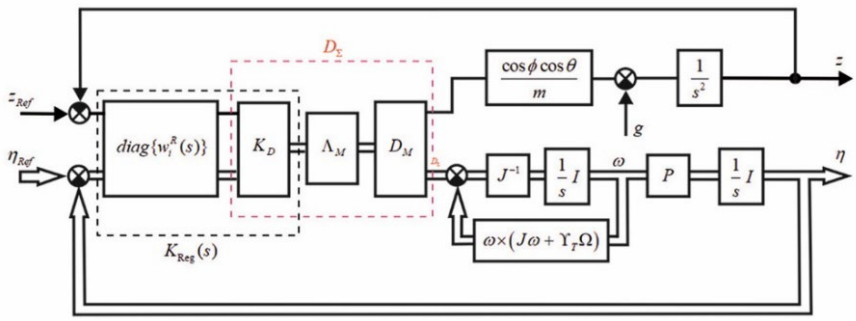

Fig. 2 Matrix block diagram of the UAV control system

The scalar signals in the block diagram in Fig. 2 correspond to the vertical motion z of the UAV along the inertial axis z_I, the double lines designate vectors of appropriate dimensions (3 or N) and S is the Laplace operator. Note that in Fig. 2 we disregard, for simplicity, the dynamics of DC motors.

The system in Fig. 2 belongs to multi-input multi-output (MIMO) feedback control systems [10]. Structurally, the numerical control allocation matrix D_M in (7) describes kinematic cross-connections between separate channels of the MIMO system, or, more correctly (if $N > 4$), the kinematic relations between N thrusts T_i and four control signals T_Σ, τ_x, τ_y, τ_z.

Commonly, the matrix regulator $K_{Reg}(S)$ in such systems is taken in the form

$$K_{\text{Reg}}(s) = K_D diag\{w_i^R(s)\}. \tag{9}$$

$K_D = D_M^{-1}$ for $N = 4$, and $K_D = D_M^{+}$ for $N = 6$ or $N = 8$,

where D_M^+ is the Moore-Penrose pseudoinverse of D_M, and $w_i^R(S)$ ($i = z, \phi, \theta, \psi$) are the scalar transfer functions of the regulators in separate channels. In practice, the standard PID regulators are often used as $w_i^R(S)$ in (9).

Let us denote $D_\Sigma = \{d_{ij}^\Sigma\}$ the following matrix:

$$D_\Sigma = D_M \Lambda_M K_D = D_M \Lambda_M D_M^+. \tag{10}$$

In case of no motors' degradations (i.e. $\Lambda_M = I_{N\times N}$), we have $D_\Sigma = I_{4\times 4}$ for any N, i.e. the kinematic cross-connections between four separate channels of the system in Fig. 2 are

compensated. For that reason, the regulator $K_{Reg}(S)$ (9), which incorporates a matrix part $K_B = D_M^+$, is usually called decoupling regulator [10].

In what follows, not to encumber the exposition with complex formulas, when analyzing robustness of the control system we shall assume that the angles and angular velocities of the UAV are so small that the nonlinear terms in the dynamics equations of rotational motions (3) can be neglected, and the cosines of all angles are approximately equal to unity. On these conditions, the dynamics equations (2)-(4) take on the following linearized form

$$\frac{d^2 z}{dt^2} = \frac{1}{m} T_\Sigma - g \quad , \tag{11}$$

$$J \frac{d\omega}{dt} = \tau \quad , \tag{12}$$

and the matrix block diagram of the UAV control system in Fig. 2 reduces to the simplified form shown in Fig. 3.

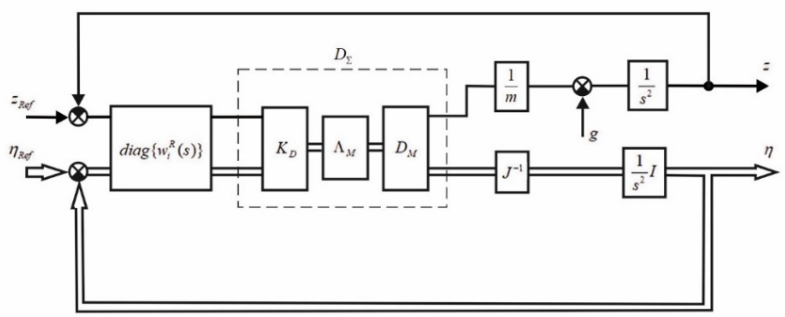

Fig. 3 Matrix block diagram of the linearized control system of the UAV

If $\Lambda_M = I_{N\times N}$ and $K_D = D_M^+$, that is if $D_\Sigma = I_{4\times 4}$, then all kinematic cross-couplings between separate channels of the linearized MIMO control system in Fig. 3 are compensated and the system reduces to four independent single-input single-output (SISO) linear systems. As an instance, the roll channel ϕ of the decoupled linear MIMO control system in Fig. 3 is shown in Fig. 4 where I_x is the moment of inertia around the x_B axis. Note that the dynamics of the plant in Fig. 4 is described by a double integrator (i.e., by two zero poles at the origin of the complex plane).

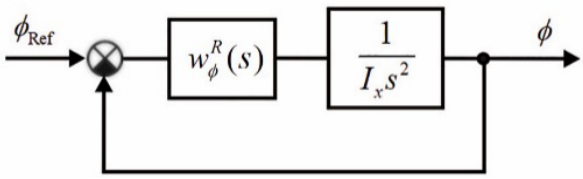

Fig. 4 Block diagram of the decoupled linear control system (the roll channel ϕ)

In case of motors' partial degradations, i.e. for $\Lambda_M \neq I_{N\times N}$ and $D_\Sigma \neq I_{4\times 4}$, the linear MIMO system in Fig. 3 is cross-coupled and the dynamics of the system is described by four

independent double integrators. This means that in the state-space, the multivariable plant has eight zero eigenvalues.

Conflict Setting

To proceed in the analysis of the robust conditions, it is more appropriate to transform the matrix block diagram in Fig. 4 to the equivalent four-dimensional case in Fig. 5, where the vectors $\zeta(s)$, $\rho_{\text{Out}}(s)$ of size 4x1 and the 4x4 diagonal matrix M are given by the following expressions:

$$\zeta(s)=\begin{bmatrix} z_{\text{Ref}}(s) \\ \eta_{\text{Ref}}(s) \end{bmatrix}, \quad \rho_{\text{Out}}=\begin{bmatrix} z(s) \\ \eta(s) \end{bmatrix}, \quad M_{\Sigma}=\begin{bmatrix} m & 0 & 0 & 0 \\ 0 & I_x & 0 & 0 \\ 0 & 0 & I_y & 0 \\ 0 & 0 & 0 & I_z \end{bmatrix}, \tag{13}$$

in which the components of the three-dimensional vector η in the four-dimensional vector $\rho_{\text{Out}}(s)$ are the roll (ϕ), pitch (θ), and yaw (ψ) angles, i.e. $\eta=[\phi,\theta,\psi]^T$.

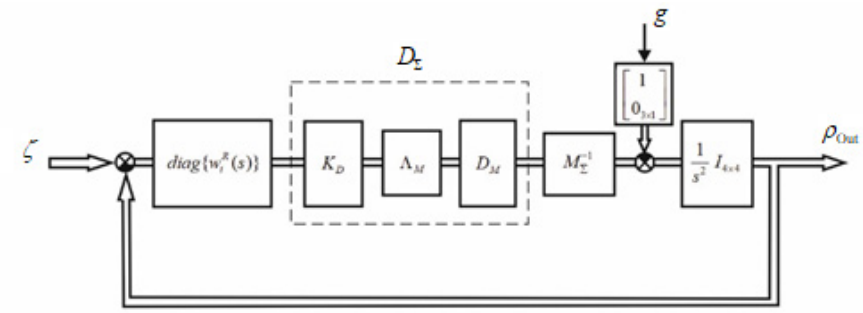

Fig. 5 Transformed block diagram of the linear control system of the UAV

Research Results

Robust Analysis Control of the UAV's Control System in case of Motors' Partial Degradations.

The transfer matrix of the open-loop MIMO system in Fig. 5 in case of $\Lambda_M \neq I$ has the form:

$$W(s)=\frac{1}{s^2}M_{\Sigma}^{-1}D_{\Sigma}diag\left\{w_i^R(s)\right\}. \tag{14}$$

In what follows, we shall admit for simplicity that all $w_i^R(s)$ regulators in (9) are identical, that is $w_i^R(s)=w_R(s)$. Then, instead of (14), we can write down

$$W(s)=w(s)R, \tag{15}$$

where $w(s)=w_R(s)/s^2$ and $R=M_{\Sigma}^{-1}D_{\Sigma}$.

In the theory of multivariable control, such systems, that is MIMO systems with identical transfer functions $w(s)$ of separate channels and rigid cross-connections described by square numerical matrix R, are called uniform MIMO systems [10].

The transfer matrix $\Phi(s)$ of the closed-loop control system of the UAV in Fig. 5 with respect to output signals is equal to

$$\Phi(s) = \left[I + W(s)\right]^{-1} W(s) = w(s)R\left[I + w(s)R\right]^{-1}, \tag{16}$$

and the stability of the closed-loop system is determined by the locations of the roots of the characteristic equation

$$\det[I + W(s)] = \det\left[I + w(s)R\right] = 0. \tag{17}$$

Note, that in case of normally functioning motors, that is in case $\Lambda_M = I$, the matrix R in (15) equals M_{Σ}^{-1} and, instead of (16) and (17), we have

$$\Phi(s) = \begin{bmatrix} \frac{w(s)/m}{1+w(s)/m} & 0 & 0 & 0 \\ 0 & \frac{w(s)/I_x}{1+w(s)/I_x} & 0 & 0 \\ 0 & 0 & \frac{w(s)/I_y}{1+w(s)/I_y} & 0 \\ 0 & 0 & 0 & \frac{w(s)/I_z}{1+w(s)/I_z} \end{bmatrix} \tag{18}$$

$$\det\left[I + W(s)\right] = \left[1 + w(s)/m\right]\left[1 + w(s)/I_x\right]\left[1 + w(s)/I_y\right]\left[1 + w(s)/I_z\right] = 0, \tag{19}$$

that is the transfer matrix of the closed-loop system takes on a diagonal form, and the characteristic equation reduces to the product of four characteristic equations of separate channels.

In other words, in case of $\Lambda_M = I$, the stability of the UAV's control system is determined by stability of independent separate channels.

Let us discuss now the robustness of the UAV's control system with respect to possible losses of the motors' partial degradations. In accordance with the general robust theory [7,8], represent the matrix Λ_M in (10) as a sum of the ideal (unit) matrix I and the additive uncertainty Δ_M, i.e. in the form

$$\Lambda_M = I + \Delta_M, \tag{20}$$

where the diagonal elements of the diagonal matrix Δ_M are equal to $\lambda_i^M - 1$.

Then the robustness condition of the UAV's control system with respect to additive uncertainty Δ_M can be written in the following form [7]:

$$\| \Phi(j\omega) \|_\infty \le \frac{1}{\| \Delta_M \|}, \tag{21}$$

where $\| \Delta_M \|$ denotes the spectral norm of the matrix Δ_M which is equal to the largest of modulus of the diagonal elements of the matrix Δ_M. The so-called Hardy norm $\| \Phi(j\omega) \|_\infty$ in (21) is determined as the strict upper bound of the largest singular value (denoted as $\bar{\sigma}$) of the transfer matrix $\Phi(j\omega)$ (18) of the ideal control system over the whole frequency range of ω $(0 \le \omega \le \infty)$, and is equal to:

$$\| \Phi(j\omega) \|_\infty = \sup_\omega \bar{\sigma}\left(\Phi(j\omega)\right). \tag{22}$$

It is easy to notice that for the diagonal transfer matrix $\Phi(s)$ (18), the largest singular value $\bar{\sigma}$ at any frequency ω is determined as the largest of the absolute values of diagonal elements of the matrix $\Phi(j\omega)$. This allows one to impart a simple geometrical interpretation to the robust condition (21). Let us re-wright the condition (21), accounting for (18) and (22) and the above remark, in the form

$$\sup_\omega \left[\max_i \left| \frac{w_i(j\omega)}{1 + w_i(j\omega)} \right| \right] \le \frac{1}{\| \Delta_M \|}, \tag{23}$$

where $w_i(j\omega)$ ($i = 1,2,3,4$) denote the transfer functions of the separate channels of the open-loop control system of the UAV in case of $\Lambda_M = I$ (e.g., $w_1(j\omega) = w(j\omega)/m,\ w_2(j\omega) = w(j\omega)/I_x,$ etc.).

Then, to get the numerical estimates of allowable motors' partial degradations based on the condition (23), one can use the well-known in the classical feedback control graphical procedure of determining the oscillation index (or peak gain) of the SISO control systems [11]. It can be shown that on passing in (23) to the equality sign, that condition for any i is reduced to the form

$$\left[\mathrm{Re}\{w_i(j\omega)\} + \frac{1}{1 - \| \Delta_M \|^2} \right]^2 + \left[\mathrm{Im}\{w_i(j\omega)\} \right]^2 = \frac{\| \Delta_M \|^2}{(1 - \| \Delta_M \|^2)^2}. \tag{24}$$

Geometrically, this expression determines on the complex plane of the hodograph $w_i(j\omega)$ a circle with the center in the point C with the coordinates $\{-1/(1 - \| \Delta_M \|^2), j0\}$

and the radius $r = \| \Delta_M \| / (1 - \| \Delta_M \|^2)$. The allowable value $\| \Delta_M \|_i$ for any i is determined by the radius of the circle which touches the hodograph $w_i(j\omega)$, and for the whole control system, the allowable motors' degradation is equal, based on the condition (23), to the minimal value of all $\| \Delta_M \|_i$ ($i = 1,2,3,4$).

Note that for $\| \Delta_M \| \to 0$, the circle (24) shrinks to the critical point $\{-1, j0\}$. Note, also, that, by definition, the norm $\| \Delta_M \|$ is always less than unity.

Numerical example

Consider a control system of a quadrotor with the following parameters: $m = 2.5\,kg$, $I_x = I_y = I_z = 0.5\,kg \cdot m^2$. The matrices D_M and $K_D = D_M^{-1}$ are equal to

$$D_M = \begin{bmatrix} 1.0 & 1.0 & 1.0 & 1.0 \\ 0 & 0.2 & 0 & -0.2 \\ -0.2 & 0 & 0.2 & 0 \\ -0.3 & 0.3 & -0.3 & 0.3 \end{bmatrix}, \quad K_D = \begin{bmatrix} 0.25 & 0 & -2.5 & -0.833 \\ 0.25 & 2.5 & 0 & 0.833 \\ 0.25 & 0 & 2.5 & -0.833 \\ 0.25 & -2.5 & 0 & 0.833 \end{bmatrix}, \tag{25}$$

and identical PID-regulators with the transfer function

$$w_R(s) = 0.0928 + \frac{0.0043}{s} + \frac{5.25}{0.1834s + 1} \tag{26}$$

are chosen as regulators in separate channels. The transfer function (26) is obtained by using the graphical interface pidTuner of the package Control System Toolbox in MATLAB. In Fig. 6, there are shown the Nyquist hodographs $w_1(j\omega)$ and $w_2(j\omega) = w_3(j\omega) = w_4(j\omega)$ of the separate channels of the UAV's control system with PID-regulators (26) and the circle tangent to the hodographs $w_{2,3,4}(j\omega)$ is drawn.

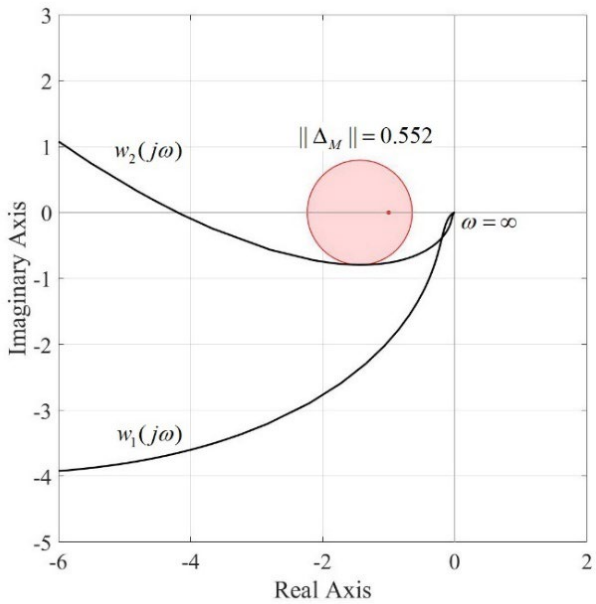

Fig. 6 Robustness analysis of the UAV' control system

Based on (24), this circle determines the largest allowable value of the additive uncertainty equal to $\| \Delta_M \| = 0.552$. Correspondingly, the smallest allowable value of the coefficient of motors partial degradation equals $\max(\lambda_i^M) = 0.448$. Further loss of motors effectiveness (i.e. the smaller values of λ_i^M) may result in loss of stability of the UAV's control system.

Altitude channel (flight height) transient responses of the ideal UAV's control system and control system with motors' efficiency degradation (for $\max(\lambda_i^M) = 0.3$) are shown in Fig. 7 and Fig. 8. As can be seen from Fig. 8, the control system with motors' efficiency degradation is unstable.

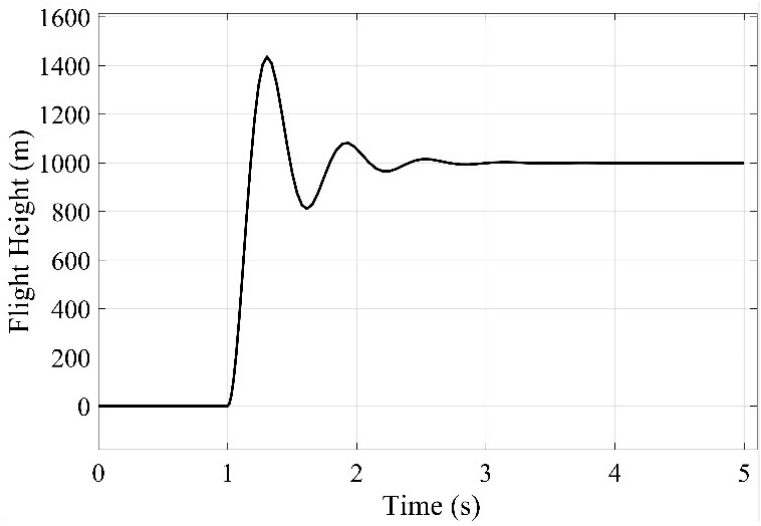

Fig. 7 Transient response of ideal control system

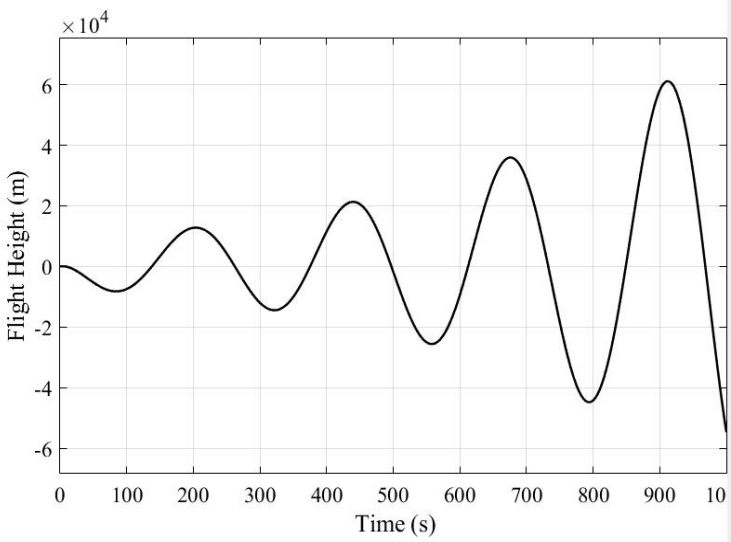

Fig. 8 Transient response in case of motors' efficiency degradation

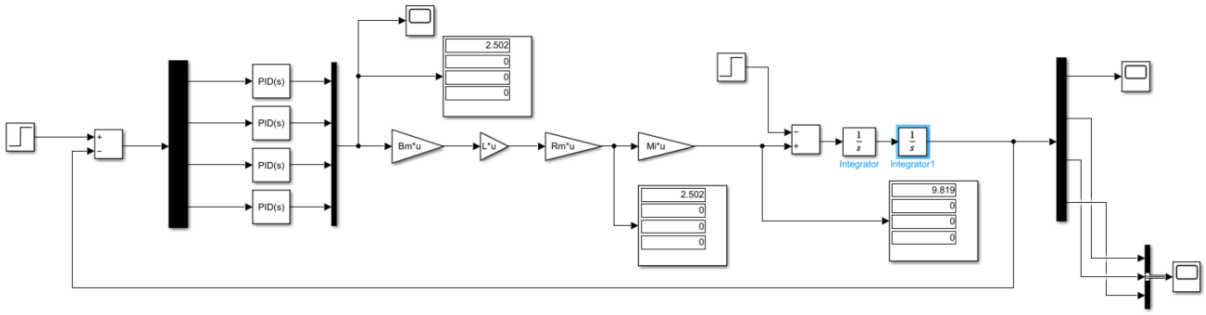

Fig. 9 Simulink model of the UAV's control system

The transient responses in Fig. 7 and Fig. 8 were obtained by the UAV's control system Simulink model shown in Fig. 9.

Conclusion

A method of analysis of robustness of the UAV's control system with respect to possible loss of effectiveness of motors which is presented as an additive uncertainty, is proposed in the paper. The largest allowable loss of effectiveness (or partial degradation) of motors is determined by a simple graphical procedure on the complex plane of Nyquist hodographs of separate channels of the UAV's control system. A numerical example illustrating the proposed method of robustness analysis is given.

References

1. Hassanalian M., Abdelkefi A. (2017) Classifications, applications, and design challenges of drones: a review. Progress in Aerospace Sciences, 2017, vol. 91.- p. 99-131.
2. Huang Y., Thomson S.J., Hoffmann W.C., Lan Y., Fritz B.K. (2013) Development and prospect of unmanned aerial vehicle technologies for agricultural production management. International Journal of Agricultural and Biological Engineering, vol. 6(3), pp. 1-10. USDA-ARS, Nebraska.
3. Yushu Y., Yiqun D. (2019) Global Fault-Tolerant Control of Underactuated Aerial Vehicles with Redundant Actuators. Hindawi, Intern. Journal of Aerospace Engineering, pp. 1-12.
4. Schneider T. (2011) Fault-tolerant Multirotor Systems. Swiss Federal Institute of Technology, Zurich.
5. Peng L., Erik-Janvan K., Bin Y. (2014) Actuator Fault Detection and Diagnosis for Quadrotors. Concordia University, Montreal.
6. Gasparyan O., Darbinyan H. (2019) L_1 Adaptive Control of Quadcopters. CSIT Conference 2019, IIAP, Yerevan, 2019.-p. 137-140.
7. Green M., Limebeer D. J. N. Linear Robust Control. Prentice Hall, Englewood Cliffs, 1995.
8. Kwakernaak H. (1993) Robust control and H-optimization. Automatica, 29:255–273, 1993.
9. Mahony R., Kumar V., Corke P. (2012) Multirotor aerial vehicles: Modeling, estimation, and control of quadrotor. Robotics and Automation Magazine, 2012, 19(3).- p. 20-32.
10. Gasparyan O.N. (2008) Linear and Nonlinear Multivariable Feedback Control: A Classical Approach. John Wiley & Sons Ltd, UK, 2008.- 374 p.
11. Dorf R., Bishop R. (2016) Modern Control Systems, Pearson, 13-th edition, 2016.-1032 p.

Bulletin Of High Technology N1(25) 2023.-pp. 67-80.

O.N. Gasparyan, V.H. Ispiryan, G.A. Melkonyan, T.A. Simonyan

ԱՆՕԴԱՉՈՒ ԹՌՉՈՂ ՍԱՐՔԵՐԻ ԿԱՌԱՎԱՐՄԱՆ ՀԱՄԱԿԱՐԳԵՐԻ ՌՈԲԱՍՏՈՒԹՅԱՆ ՎԵՐԼՈՒԾՈՒԹՅՈՒՆԸ ՇԱՐԺԻՉՆԵՐԻ ՄԱՍՆԱԿԻ ԽԱՓԱՆՈՒՄՆԵՐԻ ԴԵՊՔՈՒՄ

Գասպարյան Օ.Ն., Իսպիրյան Վ.Հ, Մելքոնյան Գ.Ա., Սիմոնյան Տ.Ա.
Հայաստանի ազգային պոլիտեխնիկական համալսարան

Բազմառոտորային անօդաչու թռչող սարքերը (ԱԹՍ) լայնորեն օգտագործվում են ռազմական առաջադրանքներում, ինչպես նաև տարբեր քաղաքացիական ոլորտներում, ինչպիսիք են գյուղատնտեսությունը, որոնողափրկարարական աշխատանքները, անտառներում հրդեհների հայտնաբերումը, երթևեկության մոնիտորինգը և այլն: Անօդաչու թռչող սարքերի իրական թռիչքներում որոշ անսպասելի իրավիճակների հետրանքով կարող են առաջանալ կառավարման համակարգի տարբեր տարրերի կամ սարքերի խափանումներ: Սա, իր հերթին, կարող է հանգեցնել ամբողջ համակարգի փլուզմանը և ԱԹՍ-ի ոչնչացմանը: Առաջին հերթին խոսքը վերաբերում է DC շարժիչներին և պտուտակներին, որոնք, ի տարբերություն էլեկտրոնային սարքերի և տվիչների, չեն կարող կրկնօրինակվել: Աշխատանքում առաջարկվում է անօդաչու թռչող սարքերի կառավարման համակարգերի ռոբաստության վերլուծության մեթոդ, շարժիչների հնարավոր արդյունավետության մասնակի կորստի դեպքում: Արդյունավետության առավելագույն թույլատրելի կորուստը որոշվում է պարզ գրաֆիկական եղանակով, կոմպլեքս հարթության վրա համակարգի առանձին կապուղիների Նայքվիստի հոդոգրաֆներով: Ներկայացված է ԱԹՍ-ի կառավարման համակարգի ռոբաստության վերլուծության առաջարկված մեթոդը պարզաբանող թվային օրինակ:

Բանալի բառեր. բազմառոտորային ԱԹՍ, շարժիչների արդյունավետության կորուստ, բազմաչափ կառավարման համակարգ, ադիտիվ անորոշություն, ռոբաստություն:

АНАЛИЗ РОБАСТНОСТИ СИСТЕМ УПРАВЛЕНИЯ БПЛА В СЛУЧАЕ ЧАСТИЧНОЙ ПОТЕРИ ЭФФЕКТИВНОСТИ ДВИГАТЕЛЕЙ

Гаспарян О.Н., Испирян В.Г., Мелконян Г.А., Симонян Т.А.
Национальный политехнический университет Армении

Многороторные беспилотные летательные аппараты (БПЛА) широко используются в военных целях, а также в различных гражданских областях, таких как сельское хозяйство, поисково-спасательные работы, обнаружение лесных пожаров, мониторинг движения транспорта и т.д. В реальных полетах БПЛА возникают непредвиденные ситуации приводящие к отказам различных элементов или устройств системы управления БПЛА. Это, в свою очередь, может привести к крушению и полному уничтожению летательного аппарата. В первую очередь это касается двигателей постоянного тока и пропеллеров, которые, в отличие от электронных

устройств и датчиков, не могут быть продублированы. В статье предложен метод анализа робастности систем управления БПЛА в случае возможной частичной потери эффективности моторов. Предельно допустимая потеря эффективности определяется простой графической процедурой на комплексной плоскости годографов Найквиста отдельных каналов системы. Приведен численный пример, иллюстрирующий предложенный метод анализа робастности системы управления БПЛА.

***Ключевые слова*:** многороторный БПЛА, потеря эффективности двигателей, многомерная система управления, аддитивная неопределенность, робастность.

Submitted on 22.12.2022
Sent for review on 23.12.2022
Guaranteed for printing on 28.04.2023

UDC - 661.833.321.3:615.322

APPLICATION PERSPECTIVES OF THE AVAN SALT MINE'S BOTTOM SEDIMENT'S HIGHLY MINERALIZED CLAY IN MEDICINAL CLAYS AND COSMETOLOGY

Gagik H. Nersisyan
Shushi University of Technology
7 V. Vagharshyan, Stepanakert
gagik.ners51@gmail.com
ORCID iD: 0000-0002-7269-7973
Republic of Artsakh

Narine V. Farsiyan
Shushi University of Technology
7 V. Vagharshyan, Stepanakert
nara.nar@mail.ru
ORCID iD: 0009-0003-2844-2898
Republic of Artsakh

Gurgen G. Hakobyan
Republican Speleotherapeutic Center RA
4 Acharyan str. 2nd impasse, 0040, Yerevan
covid.net.tour@gmail.com
ORCID iD: 00009-0007-4713-6465
Republic of Armenia

Inara G. Navtalyan
Shushi University of Technology
7 V. Vagharshyan, Stepanakert
inaranavtalyan3@gmail.com
ORCID iD: 0009-0007-5706-5189
Republic of Artsakh

Aram R. Mikaelyan
Armenian National Agrarian University
74 Teryan St, 0009, Yerevan
aramrmik@yahoo.com
ORCID iD: 0000-0002-4668-3498
Republic of Armenia

https://doi.org/10.56243/18294898-2023.1-81

Abstract

The healing and cosmetological properties of clays have been known since ancient times. The clay's healing and cosmetic properties are used to treat various diseases and have

medicinal uses for skin quality improvement. The objective of this paper is to study the quantitative composition of highly mineralized clay, which is a bottom sediment separated during the processing of the raw material extracted from Yerevan Avan Salt Mine, and to identify the possibilities and scope of its application. The formulation of healing clays, anti-inflammatory agents, pain-relieving balms, beauty products, and skin scrubs having improved properties was developed using stable combinations of highly mineralized clay and natural additives based on the experimental findings.

Key words: rock salt, mineralized clay, microelements, propolis, anti-inflammatory agent.

Introduction

Clay is a universal remedy for strengthening the immune system and treating various diseases, such as arthritis and polyarthritis, spinal diseases of non-tuberculosis origin, inflammatory and post-traumatic diseases of bones, muscles, and tendons, digestive system diseases, and diseases of female genital organs. Clay is used in creams, pastes, rubbings, healing baths, aqueous suspensions, triturations, applied to painful points, etc. However, a scientifically based assessment of the healing properties of clay is not yet sufficient. More research is needed before scientists will know the true benefits and risks of clay in humans. It is known that all clays have one unique property: they absorb toxins. Therefore, clay, if used wisely, cannot be harmful or risky. Each group of clay, depending on the impurities included in the composition, has its own function and use [1]. Analyses have shown that clay contains high quantities of mineral salts and trace elements, which are vital for humans. Mineralogical studies show that pharmaceutical clay is composed of bentonite and organic substances. The variety of mineral composition in clay is not inferior to that of fruits and vegetables. Various types of clay are known in Armenia. Proportions of mineral substances in clay are universal, and combinations are unprecedented [2]. Natural clay has a more heterogeneous composition. Natural clay is rich in U, V, Cd, Mo, Tl, Ag, Ni, Cu, Sb, As, S, Se, and Br. Therefore, the oral use of clay can not be dangerous [3]. Armenia is rich in deposits of various types of clay. There are known deposits of Noyemberyan bentonite clays and zeolites, deposits of bentonite clays in Sarigyugh, etc. [4].

An excellent illustration of the origins of geophagy can be found in the legends related to the therapeutic properties of the clay from Chimayo, New Mexico. X-ray diffraction analysis of 22 samples from New Mexico, North America, and worldwide showed highly variable clay mineral compositions. One could be a complicated mixture of illite, kaolinite, smectite, chlorite, and vermiculite, while the other could be a monometallic smectite or kaolinite. The quantities of elements (Al, Si, K, Na, Ca, Mg, Fe, Mn, Ti, P, S, Ba, Sr, Pb, Zn, Cd, Co, Cu, Cr, Ni, V, Zr, Se, Mo, Be, Sb, and As) extracted by 0.12 M hydrochloric acid varied from approximately 1.0 mg/g to the limit of detectability, 0.0001 mg/g. Potential long-term human health effects were evaluated with the Reference Dose Ratio (RDR). It divides the quantity of the element extracted from 50 g of the total sample by the recommended reference dose (RfD) reported in the Environmental Protection Agency's (EPA,

USA) IRIS (Integrated Risk Information System) database. For Na, Cr, Sb, and As, the median RDR values were higher than 1.0, suggesting an abnormally high potential intake. Given the variety of substances humans ingest, care should be taken when comparing the findings of one clay study to those of another without considering the mineralogical and chemical information [3].

With the worldwide rise of infectious diseases and the growing number of antibiotic-resistant bacterial strains, the need for precise identification, prevention, and efficient treatment is more vital than ever.

In recent decades, the misuse of common antibiotics has driven the need to discover new inhibitory agents. Therefore, natural products such as clays exhibiting antibacterial properties are prominent. By annihilating bacteria and absorbing harmful substances and gases, clay cleanses the body of toxins, slags, and heavy metals. It has a strong antibacterial and antitumor effect. It refers to benign (tumors like tresses, fibroids, mastopathy, etc.) and malignant (cancerous) tumors. Supposedly, it is because the clay contains radium. Human body needs it in small, limited doses. It is possible that clay, as a natural sterilizer, acquired its bactericidal effect with the presence of radium [4].

The absorbing properties of clay minerals are well manifested for skin and gastrointestinal disease treatment. However, the antibacterial properties of clay have attracted less attention from scientists.

Recently, French green clay has been proven to cure Buruli ulcer, a necrotic or "meat-eating" infection caused by *Mycobacterium ulcerans*. Evaluation of the antibacterial properties of this clay can provide effective and affordable treatment of Buruli ulcers and other skin infections [5].

Experiments involving the extraction of carbonate-hosted clay materials resulted in a wide range of laboratory protocols (e.g., hydrochloric acid, acetic acid, formic acid or cation-exchange resins). Refraction is emphasized as the main factor when studying the significance of clay minerals for palaeoenvironmental and diagenetic interpretations. Experiments show that in the case of mixed carbonate-clastic facies, the relative increase in intensity peaks of quartzeudolomite (where present) hides the further identification of non-carbonate minerals. Today, the dimension is observed despite the effective dissolution of calcite in cases of higher concentrations of acetic acid.

For calcite-dominated lithologies (oolitic limestone), the use of acetic acid at higher concentrations resulted in the most efficient decarbonatation [6].

To determine the most promising natural types of clay in Armenia, some experts have provided comparative analyses of their composition and usage suggestions [2].

- Clay from the Artik region: Color - white with a pinkish tint, odorless, consistency - dense. Composition - sulfate-hydrocarbonate-sodium, pH - slightly alkaline. Mineralization -1.3 g/dm^3; (SO_4 - 70 mg/eq%; HCO_3-23 mg/eq%; (Na + K) - 83 mg/eq%); pH 8.43. Emission spectral analysis showed the presence of the following chemical elements (in%): Si- 3.5-4.5, Ca- 0.1-0.25, Ni- 0.001, Al- 1.5-3.5, Fe- 2 ,5-3.5, Cr- 0.05-0.75, Mg- 0.32-3.0, Mn - 0.18-1.8, Mo- traces, Ti- 0.016-0.56, Sr -0.0075-0.0085. Microbiological parameters are in normal state. The presented composition enables one to attribute clay from the Artik region of the

Republic of Armenia to the category of natural remedies and recommend its use in restorative therapy.

- Clays from Voghjaberd area of Kotayk Marz:

Sample I. Colour - white, consistency - dense, composition - sulfate-calcium-sodium, contains metasilicic and orthoboric acids, pH - slightly alkaline. Mineralization -4.8 g/dm^3, SO_4 - 2116.756 mg/dm^3, Ca -521.04 mg/dm^3, (Na+K) - 507.15 mg/dm^3, H_2SiO_3 - 47.0 mg/dm^3, HBO_3 -11.0 mg/dm^3, pH 7.8.

Sample II. Colour - white, consistency - dense, composition - sulfate-calcium-sodium, contains metasilicic and orthoboric acids, pH - slightly alkaline. Mineralization -2.5 g/dm^3, SO_4 - 4131.46, Ca 569.136, (Na+K) - 2538.28 mg/dm^3, H_2SiO_3 - 43.0 mg/dm^3, HBO_3-11.0 mg/dm^3, pH 8.19.

Microbiological parameters are in a normal state. The studied samples, in particular, Sample I, can be recommended for the treatment of articular pathologies and metabolic disorders in the form of clay-water baths and applications. The alkaline reaction and the bioactive components in all samples provide a basis for a deep and more comprehensive study of local origin clays before they could be recommended for use in clinical experience.

The effect of salt on the surface properties of clay minerals depends on the nature of the mineral, the properties of the salt used, and its state (in solution or adsorbed). It has been proven that the treatment of clay minerals with NaCl, $MgCl_2$, $Ca(CH_3COO)_2$, and $ZnCl_2$ solutions lead to an increase in their water-holding capacity: NaCl > $MgCl_2$> $Ca(CH_3COO)_2$ ≈ $ZnCl_2$ [7].

It should be noted that in the Armenia there are still no technical regulations developed for the natural resources of the crust, particularly the requirements for natural healing clays, the order of use, conditions, and requirements of the raw materials classified and extracted. The exploitation of these resources violates all the technical regulations adopted for the operation of such mines. For this reason, it is necessary to register the results of studies of therapeutic mud in resort (sanatorium-resort) zones [8].

Rock salt reserves in Armenia amount to several billion tons. The Avan salt mine is big. It is located in the northeastern part of Yerevan. It has been known since 1949; industrial exploitation began in 1967. The Miocene sedimentary layer included in the geological structure of the Avan salt mine is expressed by the alternation of clay and rock layers and forms steep flanks and meridian-spreading brachyanticlinal folds.

The thickness of the alluvial stratum is 700 m, and the thickness of the exploited salt strata is 2-50 m.

In the geological structure, dolomite and andesite basalts of the Pliocene, with a capacity of about 220 m and partly Pleistocene, are present [9]. In the **Republican Speleological Therapeutic center** operating on the base of the Avan salt mine, bronchial, pharyngitis, bronchitis, and other diseases are treated [10]. The rock salt for the cattle breeding (no less than 93% of sodium chloride) and ground salt (no less than 90% of sodium chloride) for technical purposes in the plant's mine at a depth of 300 m.

Technical rock salt

Mass portion of sodium chloride, %, no less than	93,0
Mass portion of calcium-ion, %, no more than	0,8
Mass portion of magnesium-ion, %, no more than	0,8
Mass portion of sulphate-ion, %, no more than	2,0
Mass portion of substance which is insoluble in water, %, no more than	5,0
Mass portion of humidity, %, no more than	0,4

In the first stage of table salt production, the physical and mechanical mixture solution formed by dissolving the rock salt in water is subjected to purification to remove the residue of carbonate-sulfate-clay mineral origin, which is insoluble in water (Fig. 1).

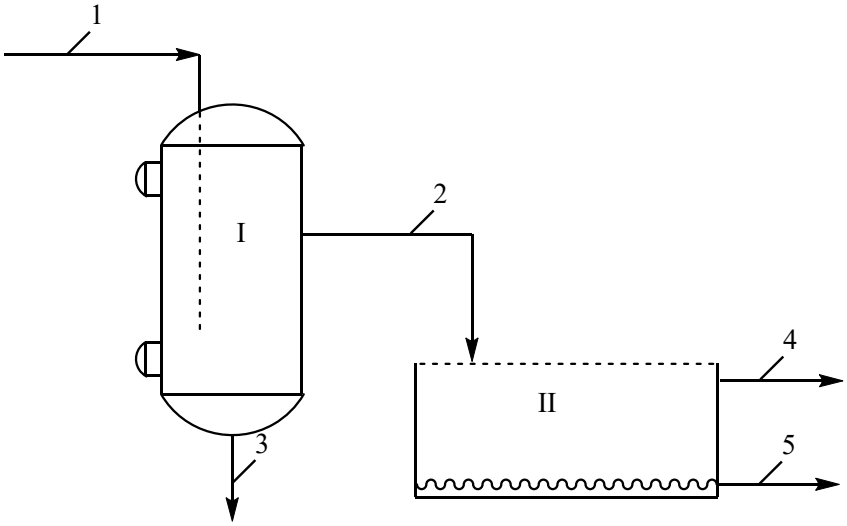

Fig. 1 Principal diagram of the purification technology cycle from carbonate-sulfate-clay mineral residues

Material flows: 1. Initial physico-mechanical mixture-solution, 2. The mixture-solution cleaned from coarse mixtures and sand, 3. Sand residue, 4. Solution purified from mechanical mixtures for further processing, 5. Fine-grained clay sediment I - Apparatus for catching and separating coarse mixtures and sand, II - Fine-grained clay mixture settling tank (open basin)

Conflict Setting

The study aimed to identify the possibilities of using the bottom sediment separated during the extraction of table salt from the rock in the Avan salt plant as basis for the composition of healing clays, skin care cosmetic products, skin scrubs, and anti-inflammatory and pain-relieving balms, analgesic, anti-aging products. The task of the study is to expand the list of physiotherapeutic clay therapy products containing a new mineralized clay component and several supplements of natural origin.

Research Results

The study of bottom deposit clay separated during the production of table salt from rock salt was carried out in the Laboratory of Natural Technologies at Shushi University of

Technology. The Avan salt plant fine-grained clays were sampled to determine their physical and chemical characteristics, as for the content analysis of microelements, it was done at the Yerevan Hydrometeorology and Monitoring Center (Tab. 1).

The quantity of microelements in the sample was determined by inductively coupled plasma mass spectrometry (ICP-MS), using the PerkinElmer ELAN 9000 device, in the following operating mode: vacuum - 1.5-2.5*10^{-7} torr, argon plasma power - 1400 W, dust sprayer gas flow - 0.76-0.8 l/min, plasma-generating gas flow - 20 l/min, ambient temperature - 15-30 °C, cooling liquid flow - 13.5 l/min, cooling liquid pressure - 350 kPa, coolant temperature - 15 °C, argon purity - >99.996%. The results of the examination are presented in Tab. 2.

Table 1

Physical and chemical characteristics of bottom deposit

№	Measured indicator	Measuring unit	Measured value	Applied method by standard
1	Dry residue (180 °C)	%	61.44	ISO11923
2	Dry residue (420 °C)	%	60.31	ISO11923
3	Electroconductivity - in aqueous distillate	µS/cm	483000	ISO7888 ISO11265
4	Mineralization - in the aqueous distillate	mg/kg	314000	
5	pH - in the aqueous distillate	-	7,46	ISO10523 ISO10390

According to the findings of laboratory studies of sedimentary clay, we used it in the composition of anti-inflammatory, pain-relieving balms and creams (scrubs) for skin scrubbing.

In order to improve the healing properties of clay, natural antibacterial and pain-relieving additives were used in healing balms with a clay base: 20% alcohol solution of prpolis and essential oil of laurel, and the ingredient "Dimexide" (dimethylsulfoxide) was used to make skin tissues more permeable. Thus, the invention of Kavalgin balm was developed and registered, which refers to an anti-inflammatory, pain-relieving agent analgesic means, in particular, it is a new preparation for treating various joint disorders, neuritis, neuralgia, osteochondrosis, sciatica and other inflammations and pains.

Skin care products are mentioned in the development of the scraper ointment with clay component content. This natural ointment is a skin-cleansing, regenerating anti-inflammatory agent that is especially designed for scraping and cleaning dead skin cells, curves, and is a way to reduce the appearance of age wrinkles nourishing the skin and increasing elasticity. The cream is a combination of only natural ingredients. It exhibits pronounced protective and regenerating properties, it also has antioxidant, free radical neutralizing properties. The cream includes clay sediment containing more than 30 microelements from the processing of the Avan salt mine, lanolin, vaseline, glycerin, 20% sweet marjoram extract, grape and milk thistle seed oils.

Table 2

Composition of microelements in the bottom deposit

№	Measured indicator	Unit	Measured value
1	Lithium	mg/kg	6,03
2	Beryllium	mg/kg	0,0502
3	Boron	g/kg	0,204
4	Sodium	g/kg	1,72
5	Magnesium	g/kg	0,262
6	Aluminum	g/kg	0,0150
7	Total Phosphorus	g/kg	0,240
8	Potassium	g/kg	7,27
9	Calcium	g/kg	3,38
10	Titanium	g/kg	1,37
11	Vanadium	g/kg	0,0347
12	Chromium	mg/kg	8,99
13	Iron	g/kg	0,446
14	Manganese	g/kg	0,251
15	Cobalt	g/kg	0,0137
16	Nickel	g/kg	0,11
17	Copper	g/kg	0,0337
18	Zinc	g/kg	0,0336
19	Arsenic	mg/kg	4,08
20	Selene	mg/kg	2,25
21	Strontium	mg/kg	1,42
22	Molybdenum	mg/kg	7,73
23	Cadmium	mg/kg	0,184
24	Tin	g/kg	4,47
25	Stibium	g/kg	0,863
26	Barium	g/kg	0,0976
27	Lead	g/kg	0,0155

Based on the results of bottom deposit clay laboratory studies, we used it in the composition of anti-inflammatory and pain-relieving balms and skin scraping cream (scrub). To improve the healing properties of clay, a natural antibacterial and pain-relieving additives were used in healing balms with clay bases: a 20% alcohol solution of propolis and laurel essential oil was used, and the "Dimexide" (dimethylsulfoxide) ingredient was used to activate the permeability of skin tissues. Thus, the invention of "Kavalgin" balm was developed and registered, which refers to an anti-inflammatory pain reliever and is a new preparation for treating arthropathy, neuritis, neuralgia, osteochondrosis, radiculitis, and other inflammations and pains [11]. The invention of another preparation developed with clay, such as scrub ointment, refers to skin care products. This natural ointment is a skin-cleansing, regenerating, and anti-inflammatory agent, specifically for removing dead skin cells, smoothing wrinkles, nourishing the skin, and increasing elasticity. The ointment contains only natural ingredients and exhibits protective and regenerating properties. It also has antioxidant and free radical-neutralizing properties. The ointment includes clay sediment containing more

than 30 microelements from the processing of the Avan salt mine, lanolin, vaseline, glycerin, a 20% alcoholic extract of Origanum, grapeseed and milk thistle seed oils [12].

Conclusion

The qualitative-quantitative characteristics of the bottom sedimentary clay of the Avan salt mine, the effectiveness of the new healing balms developed with clay support allow us to conclude that the separated clay bottom sediment has healing and cosmetological properties. It is ecologically, toxicologically safe and can be used to create skin care products and medicines. On the basis of the separated mineralized clay sediment, we also find it promising for the creation of preventive toothpastes, gums, care for the teeth and oral cavity, in particular, sanitation of the oral cavity, elimination of unpleasant odor from the mouth, teeth whitening anti-inflammatory agents.

Based on the separated mineralized clay sediment, we also find it promising for the creation of prophylactic toothpastes, gums, teeth and oral cavity care, particularly oral cavity renewal, bad breath elimination, teeth whitening anti-inflammatory products.

Reference

1. Carretero M.I. (2002) Clay Minerals and Their Beneficial Effects upon Human Health. A Review. Applied Clay Science, 21.- p. 155-163. http://dx.doi.org/10.1016/S0169-1317(01)00085-0
2. Harutiunian B.N., Maisuryan K.V., et al. Physico-chemical characteristics of some clay deposits in the territory of the Republic of Armenia //Materials of the VIII International Conference "Modern aspects of rehabilitation in medicine", 2017, Yerevan-Stepanakert.- p.301. https://fizecomed.com/wp-content/uploads/pdf-files/nauchnie_publikacii_harutyunyan/2018/fiz-texn_kharakter_glin.pdf
3. Mascolo Nicola, Summa Vito, Tateo F Characterization of toxic elements in clays for human healing use //Applied Clay Science, Vol. 15, Issues 5–6, December 1999.- p. 491-500. https://doi.org/10.1016/S0169-1317(99)00037-X
4. Khachatryan Sh.V. Heavy Metal Adsorption by Armenian Natural Zeolite from natural aqueous solutions. Proc. of the Yerevan State Univ. Chemistry and Biology, 2014, № 2.- p. 31–35. http://ysu.am/files/8.%20HEAVY%20METAL%20ADSORPTION%20BY%20CLINOPTILOLITE%20FROM.pdf
5. Ferrell, R.E. Medicinal clay and spiritual healing. Clays Clay Miner. 56.- p. 751–760 (2008). https://doi.org/10.1346/CCMN.2008.0560613
6. Williams, L.B., Haydel, S.E., Giese, R.F. et al. Chemical and mineralogical characteristics of French green clays used for healing. Clays Clay Miner. 56.-p. 437–452 (2008). https://doi.org/10.1346/CCMN.2008.0560405
7. Coimbra R., Rocha F., Immenhauser A., Olóriz Federico, Terroso D., Horikx M. Carbonate-hosted clay minerals: A critical re-evaluation of extraction methods and their

possible bias on palaeoenvironmental information // Earth-Science Reviews, Vol. 214, 2021, 103502 https://doi.org/10.1016/j.earscirev.2021.103502.

8. Khritonova G.V., Manucharov A.S., et al. Influence of soluble salts on the surface properties of clay minerals // Bulletin of OSU No. 4 (123), p. 110-112.
9. Aghinyan A.H., Mkrtchyan T.G. "General Geology" Field Practice Study Methodical Manual //YSU Publishing House, 2022, 92 p. ISBN 978-5-8084-2554-5, http://publishing.ysu.am/files/Yndhanur_Yerkrabanutyun.pdf
10. Maisuryan K.V., Harutiunyan B.N., et al. The need for a new classification of natural medicinal peloids of the Republic of Armenia: peats, muds, clays and current problems // Materials of the VIII international conference "Modern aspects of rehabilitation in medicine", 2017, Yerevan-Stepanakert.- p. 156-158. https://fizecomed.com/wp-content/uploads/pdf-files/nauchnie_publikacii_harutyunyan/2018/bnakan_bujich_peloidner.pdf
11. Nersisyan G.H., Mikaelyan A., Ghukasyan A. (2022) Anti-inflammatory ointment of combined action, short-term patent of the Invention № 723Y //Industrial Property, Official Gazette 2022, № 04/1.- pp. 6-7. https://old.aipa.am/search_mods/patents/view_item.php?id=723YAM20210099Y&language=am
12. Nersisyan G., Mikaelyan A., Ghukasyan A. (2022) Combined effect ointment, short-term patent for the invention №724Y// Industrial Property, Official Gazette 2022, № 04/1.- p. 7. https://old.aipa.am/search_mods/patents/view_item.php?id=724YAM20210101Y&language=en

Reference

1. Carretero, M.I. (2002) Clay Minerals and Their Beneficial Effects upon Human Health. A Review. Applied Clay Science, 21.- p. 155-163. http://dx.doi.org/10.1016/S0169-1317(01)00085-0
2. Арутюнян Б.Н., Майсурян К.В., Арутюнян М.Э., Езекян Н.А., Оганесян А.Н. (2017) Физико-химическая характеристика некоторых месторождений глин на территории республики армения //Материалы VIII международная конференции «Современные аспекты реабилитации в медицине», 2017, Ереван-Степанакерт.- с. 301. https://fizecomed.com/wp-content/uploads/pdf-files/nauchnie_publikacii_harutyunyan/2018/fiz-texn_kharakter_glin.pdf
3. Mascolo Nicola, Summa Vito, Tateo F Characterization of toxic elements in clays for human healing use // Applied Clay Science, Vol. 15, Issues 5–6, December 1999.- p. 491-500. https://doi.org/10.1016/S0169-1317(99)00037-X
4. Khachatryan Sh.V. Heavy Metal Adsorption by Armenian Natural Zeolite from natural aqueous solutions. Proc. of the Yerevan State Univ. Chemistry and Biology, 2014, № 2.- p. 31-35.

http://ysu.am/files/8.%20HEAVY%20METAL%20ADSORPTION%20BY%20CLINOPTILOLITE%20FROM.pdf

5. Ferrell, R.E. Medicinal clay and spiritual healing. Clays Clay Miner. 56.- p. 751-760 (2008). https://doi.org/10.1346/CCMN.2008.0560613
6. Williams, L.B., Haydel, S.E., Giese, R.F. et al. Chemical and mineralogical characteristics of French green clays used for healing. Clays Clay Miner. 56.- p. 437-452 (2008). https://doi.org/10.1346/CCMN.2008.0560405
7. Coimbra R., Rocha F., Immenhauser A., Olóriz Federico, Terroso D., Horikx M. Carbonate-hosted clay minerals: A critical re-evaluation of extraction methods and their possible bias on palaeoenvironmental information // Earth-Science Reviews,Vol. 214, 2021,103502. https://doi.org/10.1016/j.earscirev.2021.103502.
8. Харитонова Г.В., Манучаров А.С., Початкова Т.Н., Тюгай З. Влияние растворимых солей на поверхностные свойства глинистых минералов // Вестник ОГУ №4 (123).- с. 110-112.
9. Աղինյան Ա.Հ., Մկրտչյան Տ.Գ. (2022) «Ընդհանուր երկրաբանություն» դաշտային պրակտիկայի ուսումնամեթոդական ձեռնարկ // ԵՊՀ հրատ., 2022, 92 էջ: ISBN 978-5-8084-2554-5, http://publishing.ysu.am/files/Yndhanur_Yerkrabanutyun.pdf
10. Մայսուրյան Կ.Վ., Հարությունյան Բ.Ն., Գրաբսկի Մ.Ա. , Չիչակյան Ս.Մ. (2017) Հայաստանի Հանրապետության բնական բուժիչ պելոիդների՝ տորֆերի, ցեխերի, կավերի նորովի դասակարգման անհրաժեշտությունը եվ արդի խնդիրները //Материалы VIII международная конференции «Современные аспекты реабилитации в медицине», 2017, Ереван-Степанакерт.- с. 156-158: https://fizecomed.com/wp-content/uploads/pdf-files/nauchnie_publikacii_harutyunyan/2018/bnakan_bujich_peloidner.pdf
11. Ներսիսյան Գագիկ, Միքաելյան Արամ, Ղուկասյան Արեգ (2022) Համակցված ազդեցության հակաբորբոքային քսուք, Գյուտի կարճաժամկետ արտոնագիր №723Y //Արդյունաբերական Սեփականություն, Պաշտոնական Տեղեկագիր 2022, № 04/1.- էջ 6-7. https://old.aipa.am/search_mods/patents/view_item.php?id=723YAM20210099Y&language=am
12. Ներսիսյան Գագիկ, Միքաելյան Արամ, Ղուկասյան Արեգ, Համակցված ազդեցության քսուք,Գյուտի կարճաժամկետ արտոնագիր (2022) №724Y// Արդյունաբերական Սեփականություն, Պաշտոնական Տեղեկագիր 2022, № 04/1.- էջ7. https://old.aipa.am/search_mods/patents/view_item.php?id=724YAM20210101Y&language=en

G.H. Nersisyan, N.V. Farsiyan, G.G. Hakobyan, I.G. Navtalyan, A.R. Mikaelyan

ԱՎԱՆԻ ԱՂԻ ՀԱՆՔԻ ՀԱՏԱԿԱՅԻՆ ՆՍՏՎԱԾՔԻ ԿԱՎԻ ՀՆԱՐԱՎՈՐ ԿԻՐԱՌՈՒԹՅՈՒՆԸ ԲՈՒԺԻՉ ԿԱՎԵՐԻ ՈՒ ԿՈՍՄԵՏՈԼՈԳԻԱՅԻ ՄԵՋ

Ներսիսյան Գ.Հ.[1], Ֆարսիյան Ն.Վ.[1], Հակոբյան Գ.Գ.[2], Նավթալյան Ի.Գ.[1], Միքաելյան Ա.Ռ.[3]
[1] Շուշիի տեխնոլոգիական համալսարան
[2] ՀՀ առողջապահության նախարարության հանրապետական անձավաբուժական կենտրոն
[3] Հայաստանի ազգային ագրարային համալսարանի

Կավի բուժիչ և կոսմետիկ հատկությունները հայտնի են դեռևս հին ժամանակներից: Կավի բուժիչ և կոսմետիկ հատկությունները օգտագործվում են տարբեր հիվանդությունների բուժման և մաշկի որակը բարելավելու համար բուժիչ նպատակներով: Սույն աշխատանքի նպատակն է ուսումնասիրել բարձր հանքայնացված կավի քանակական բաղադրությունը, որը Երևանի Ավան աղի հանքում արդյունահանվող հումքի վերամշակման ընթացքում առանձնացված հատակային նստվածք է, և բացահայտել դրա կիրառման հնարավորություններն ու շրջանակը: Փորձարարական տվյալների հիման վրա մշակվել են թերապևտիկ կավի, հակաբորբոքային միջոցների, ցավազրկող բալասանների, կոսմետիկայի և մաշկի սկրաբների բարելավված հատկություններով պատրաստուկային ձևեր՝ օգտագործելով բարձր հանքայնացված կավի և բնական հավելումների կայուն համակցություններ:

Բանալի բառեր. քարաղ, միներալացված կավ, ակնամոմ, միկրոտարրեր, հակաբորբոքային միջոց:

ПЕРСПЕКТИВЫ ПРИМЕНЕНИЯ ВЫСОКОМИНЕРАЛИЗОВАННОЙ ГЛИНЫ ДОННЫХ ОТЛОЖЕНИЙ АВАНСКОЙ СОЛЯНОЙ ШАХТЫ В ЛЕКАРСТВЕННЫХ ГЛИНЯХ И КОСМЕТОЛОГИИ

Нерсисян Г.Г.[1], Фарсиян Н.В.[1], Акопян Г.Г.[2], Навталян И.Г.[1], Микаелян А.Р.[3]
[1] Шушинский технологический университет
[2] Республиканский центр спелеотерапии Армении
[3]Национальный аграрный университет Армении

Лечебные и косметологические свойства глин известны с древних времен. Лечебные и косметические свойства глины используются для лечения различных заболеваний и в лечебных целях для улучшения качества кожи. Целью данной работы является изучение количественного состава высокоминерализованной глины, представляющей собой донный осадок, отделяемый при переработке сырья, добываемого на Ереванской Аванской соляной шахте, и выявление возможностей и сферы ее применения. На основе экспериментальных данных разработаны рецептуры лечебных глин, противовоспалительных средств, обезболивающих бальзамов, косметических средств и скрабов для кожи с улучшенными свойствами с использованием стабильных комбинаций высокоминерализованной глины и натуральных добавок.

Ключевые слова: каменная соль, минерализованная глина, микроэлементы, прополис, противовоспалительное средство.

Submitted on 23.02.2023
Sent for review on 24.02.2023
Guaranteed for printing on 28.04.2023

Bulletin Of High Technology N1(25) 2023.-pp. 93-103.

P.A. Tonapetyan, P.Yu. Gasparyan, A.P. Tonapetyan, H.H. Nikogosyan

UDC - 631.316.023

LAYER TILLAGE COMBINED WORK MEMBER'S TRACTION RESISTANCE

Pargev A. Tonapetyan
Armenian National Agrarian University
74 Teryan St., Yerevan, RA
Shushi University of Technology
7 V.Vagharshyan, Stepanakert, AR
tonapetyan.pargev@mail.ru
ORCID iD: 0000-0002-1000-0720
Republic of Armenia

Pavlik Yu. Gasparyan
Shushi University of Technology
7 V.Vagharshyan, Stepanakert, AR
pavel64@yandex.ru
ORCID iD: 0000-0002-3764-6935
Republic of Artsakh

Anush P. Tonapetyan
Armenian National Agrarian University
74 Teryan St., Yerevan, RA
An7_777@bk.ru
ORCID iD: 0000-0001-5390-6867
Republic of Armenia

Hayk H. Nikogosyan
Shushi University of Technology
7 V.Vagharshyan, Stepanakert, AR
hnikogosyan@gmail.com
ORCID iD: 0000-0001-7247-5660
Republic of Artsakh

https://doi.org/10.56243/18294898-2023.1-93

Abstract

In this paper the traction resistance of the layer tillage unit's combined work member has been determined as that of a single whole of the frame, bore-chisel, and plane-cutting blade. The analytically obtained results have been quite well grounded by laboratory experiment. Based on this analysis, ways for lessening the work member's traction resistance have been designed.

Key words: wedge, bore-chisel, frame, plane-cutting blade, operating depth, traction resistance.

Bulletin Of High Technology N1(25) 2023.-pp. 93-103.
P.A. Tonapetyan, P.Yu. Gasparyan, A.P. Tonapetyan, H.H. Nikogosyan

Introduction

The land is cultivated to increase its fertility and create favorable conditions for the development of cultural plants. Tillage also plays an important role in controlling weeds, decay, pests and plant diseases.

Adaptation of agrotechnologies to the soil and climatic conditions of crop production includes a large number of tillage options and, accordingly, tools for their implementation. The latters are of wedge-type, which according to their working surface geometry are divided into flat and curved ones. Wedges are also symmetrical (arrow-shaped blades), asymmetrical (plough share body) and so on.

The layered soil cultivation technology, unlike others, is designed for layered loosening of the soil, on top of which further cultivation and sowing are carried out. This technology is usually applied once a year during fall or spring mulching. It is necessary to sow in the cultivated layers in spring with precise sowing machines [1,2].

Currently, layer tillage technology is widely used in advanced agricultural economies such as USA, Canada, Argentine, Germany, and many other countries [1,2,3].

The layered soil cultivation technology is most effectively applied in mountainous agriculture, where in order to ensure the water resistance of the loosened layer and to prevent soil erosion, combined layer tillage units are used, equipped with appropriate operating organs.

Conflict Setting

The study of bottom deposit clay separated during the production of table salt from

In order to perform an effective layer tillage and cultivation of the soil, it is suggested a combined working unit composed of frame (1), equipped with a chisel (2) and a plane-cutting blade (3) (Fig. 1) The suggested unit can solve various technological problems due to its structural features. The chisel is located in the lower part of the framework and is designed for opening a deep crack in the soil, and the plane-cutting blade is fixed in the middle part of the framework, and serves for widespread surface tillage and cultivation of the soil.

Applying well known scientific methods, as well as taking into account the structural and operational features of the proposed cutting unit, the traction resistance of the combined working unit is determined as the sum of the traction resistances of the framework, the chisel, and the plane-cutting blade.

Research Results

A. The traction resistance of the chisel.

Consider the chisel as a simple two-edged wedge, the flat surface of which serves as a working surface, and the lower one serves as a support. The driving force can be applied to the wedge at an arbitrary angle [3,4,5,6], at both front and rear of the wedge at that. The point of application of the force is important only for the strength calculation, and the movement is determined only by the sum of the directions and magnitudes of the forces.

Obviously, from the point of view of traction resistance, it is sufficient to consider only the horizontal component in the direction of movement. The vertical component affects the vertical displacement of the wedge (in our case, the chisel).

The chisel affects the soil under cultivation in different ways, but the essence of its work is that it does not cut with a blade (as is usually accepted), but first, compresses the soil particles and slightly displaces them, and then opens a crack in the horizontal direction [6,7,8].

V.P. Goryachkin offers the following formula for determining the resistance of a flat wedge

$$P = \frac{N sin(\alpha+\varphi)}{cos\varphi}, \quad (1)$$

where N is the normal resistance on the working surface of the wedge (chisel), $\boldsymbol{\alpha}$ is the angle of the wedge location, φ is the friction angle.

In the case of soil-cultivating machines, the determination of normal resistance is quite complicated, so for determination of the traction resistance of the chisel, let's use the simpler expression widely accepted in practice [6, 9, 10]

$$R_1 = qV, \quad (2)$$

where q is the factor volumetric rubbing of the soil, V is the volume of rubbed soil,

$$V = \frac{b_{m.ch} h^2 tg\alpha_{m.ch}}{2}, \quad (3)$$

where $b_{m.ch}$ is the width of the chisel, $\boldsymbol{h}$ is the path traveled by the chisel during soil compaction, $\alpha_{m.ch}$ is the location angle of the chisel.

Therefore: $R_1 = 0{,}5 q b_{m.ch} h^2 tg\alpha_{m.ch}$: (4)

Let's decompose the force R_1 into two components (Fig. 1).

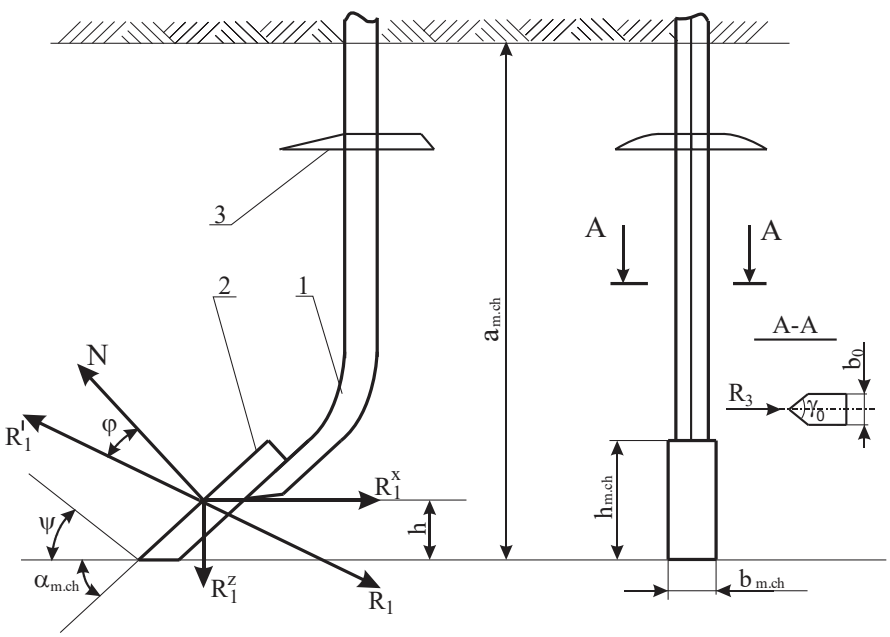

Fig. 1 Calculation scheme for determining the layer tillage chisel's traction resistance

horizontal: $R_1^x = 0{,}5qb_{m.ch}h^2tg\alpha_{m.ch}\frac{\sin(\alpha_{m.ch}+\varphi)}{cos\varphi}$ (5)

vertical: $R_1^z = 0{,}5qb_{m.ch}h^2tg\alpha_{m.ch}\frac{\cos(\alpha_{m.ch}+\varphi)}{cos\varphi}$ (6)

The following formula is recommended for determining h [6,10,11]

$$h = \sqrt{\frac{a_{m.ch}\,cos\varphi}{gtg\alpha_{m.ch}sin2\psi\cos(\alpha_{m.ch}+\psi)[ctg\psi - tg(\alpha_{m.ch}+\psi)}}\ , \quad (7)$$

where $a_{m.ch}$ is the depth of the chisel run (m).

In order to solve the problem, it is also necessary to know the angle ψ of inclination of the crack formed in the soil pressed by the chisel.

For this, the following expression is proposed [7,8,11].

$$\psi = arcsin\left(0{,}5 \pm 0{,}5\sqrt{\frac{1}{1+\left(\frac{a_1}{b_1}\right)^2}}\right)^{\frac{1}{2}}, \quad (8)$$

where a_1 and b_1 are coefficients characterizing the parameters of the chisel

$$a_1 = 2\mu - sin^2\alpha_{m.ch}(1 - 0{,}5tg\varphi), \quad (9)$$

$$b_1 = sin^2\alpha_{m.ch}(0{,}5 - tg\varphi), \quad (10)$$

where μ is the relative limit deformation of the soil

$$\mu = 1 - \frac{e^{\alpha tg\varphi}cos(\alpha_{m.ch}+\varphi)}{cos\varphi}. \quad (11)$$

From our justification of the parameters of the working organ of layer tillage, we have: the width of the chisel $b_{m.ch}$=0.02m, chisel mounting angle $\alpha_{m.ch}$ = 34^0, the maximum depth of the chisel run $\alpha_{m.ch}$= 0.45 m.

Let us take the friction angle φ = 35^0, based on the results of scientific experiments of various researchers [9,10,11].

Bearing in mind that the working organ of the layer tillage is intended for use in ploughed land, let's choose the volumetric rubbing coefficient determined for these soils of this type, from the range of values in the range of 500-1000 kg/m^3. Let's take q=750 kg/m^3. Using Eqs.1 to 10 and making appropriate calculations, we get: μ = 1, a_1=1.59, b_1 = - 0.15, ψ = 46°, h = 0.05 m, and the chisel traction resistance will be R_1= 3.84 kN.

To find ways for lessening the chisel traction resistance let's make some analyses.

Traction resistance depends on a number of factors, considering soil and climatic factors out of the scope of discussion, let's study the structural parameters of the working organ. Taking into account that the main geometrical parameters were obtained by theoretical justifications and adjusted by scientific and experimental studies, let's study the influence of the chisel mounting angle $\alpha_{m.ch}$ on the traction resistance. An optimal value for that parameter was found 34°. However, this was done in the context of the general requirements to the fluffers, that is, along with deep chiselling, loosening must also be done. There is almost no loosening function on the chisel of the layer processing organ, surface tillage is carried out with plane- cutting blade. In addition to this, the loosening along the chisel movement is also favored by the frame of the layer processing organ. With these considerations, an analysis was made to find out the effect of chisel location angle change on the traction resistance of the chisel (Fig. 2).

It can be seen from the graph that decreasing the location angle of the chisel will decrease the R_1^x component, which determines the traction resistance, and the R_2^z component will increase. Taking into account the main requirement for the chisel of the working organ of the layer tillage which is to open cracks for the infiltration of surface water.

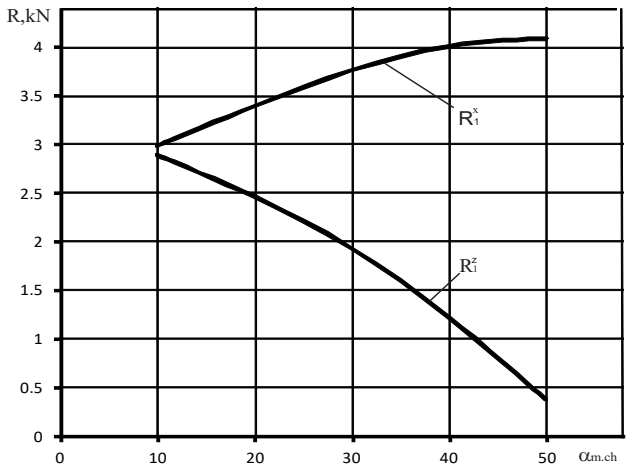

Fig. 2 The effect of the chisel location angle change on the traction resistance

We can affirm that in this case we can deviate from the range of values assigned to the parameters of the looseners and reduce the traction resistance by reducing the mounting angle of the chisel. In particular, by reducing the angle $\alpha_{m.ch}$ from the specified 34^0 to the minimum allowable value of 9^0 (that is, make it almost a flat cutter), then the traction resistance of the chisel will decrease by about 1kN or 26%.

B. The traction resistance of the flat cutter.

Let's also consider the plane-cutting blade of as a simple two-edge wedge. The simple components of the soil resistance force on the working surface of the plane-cutting blade are affected by the force R_2^{xz}, which is located on the longitudinal axis of symmetry (Fig. 3).

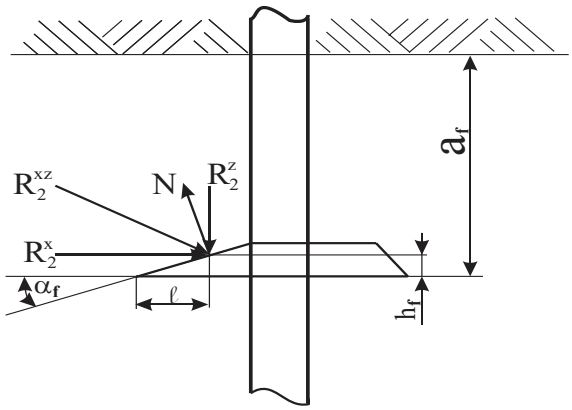

Fig. 3 Calculation scheme of the traction resistance of the plane-cutting blade of the working organ of the layer tillage unit

R_2^{xz} projection of force R_2^z characterizes the deepening ability of the flat cutter, and R_2^x projection characterizes the traction resistance. The direction of the resultant force is determined by the ψ angle of crack propagation, the point of application is determined by the dimensions h_f and ℓ.

For flat cutters, $h_f = 0{,}2a_f$ [3,7], where a_f is the depth of soil cultivation with a flat cutter, we accept up to 10 cm. Therefore h_f= 2 cm.

In order to keep the soil layer above the flat cutting blade intact as much as possible during the determination of the parameters of the layer processing unit, we have chosen the minimum value of the angle α_f of the blade crushing: $\alpha_f = 9^0$.

Therefore $\ell = \frac{h_f}{tg\alpha_f} = 12{,}6$cm.

The resultant R_2^{xz} is proportional to the normal pressure and the friction forces of the soil with the working surface, and the direction depends on the loosening angle α_f and the friction angle φ.

From Fig.3 we have the following calculation scheme $\psi = \frac{\pi}{2} - (\alpha_f + \varphi)$. The friction angle φ depends on the condition of the soil and varies widely (from 14 to 35°).

While grounding the parameters of the working organ of layer processing, in order to make it compatible, we stopped at the limit values of the parameters, including the friction angle φ =35°. Therefore, $\psi = \frac{\pi}{2} - (9 + 35) = 46°$.

R_2^x component of the force R_2^{xz} acting on the planer blade is determined by the formula of which $R_2^x = k\alpha_f\, b_f$, where k is the specific resistance of the soil, of which the range of values is k=15-50 kN/m^2, α_f is the planer blade depth of cultivation, b_f - coverage width b_f= 36 cm.

Let's assume the optimal absolute moisture of the soil is 22% and the specific resistance of the corresponding soil is 30 kN/m^2.

The refore we get $R_2^x = 1.08$ kN.

In practical calculations, the traction resistance for stony soils is assumed to be: $P = (3-5)R_2^x$, in the case of ordinary cultivated soils, where hardened or superhardened traces, clods, etc. can be encountered, which negatively affect the traction resistance $P = 2R_2^x$ is accepted.

C. Traction resistance of the framework

Let's consider the framework of the working organ as a two-edge wedge arranged in a vertical longitudinal plane, which has two symmetrical working surfaces. To calculate the resistance of the framework, the following expression was used [4,5,11]

$$R_3 = \frac{a_r b_0}{sin\beta}\left(\rho_1 + \rho_1 f ctg\frac{\alpha}{2} + \rho_2 f\frac{2d_0}{b_0} - \frac{\rho_2 f}{tg\frac{\gamma_0}{2}}\right), \quad (12)$$

where a_r is the actual depth of the framework, b_0 is the thickness of the framework, β is the angle of inclination of the framework with respect to the bottom of the furrow, $\rho_1$and ρ_2 are the specific pressure of the soil on the resistance part and side surface of the framework, respectively, d_0 is the width of the framework, f is the coefficient of friction between the soil and the steel, α is the angle of inclination of the pointed part of the framework, γ_0 is the angle of the wedge expansion.

The actual depth of the framework run is

$$a_r = a_{m..ch} - h_{m.ch} - h_f, \quad (13)$$

where $a_{m..ch}$ is the actual maximum depth of the chisel - $a_{m..ch} = 0.45$m, $h_{m.ch}$ is the height of the chisel

$$h_{m.ch} = \ell_{m.ch} \cdot \sin\alpha_{m.ch}, \quad (14)$$

where $\ell_{m.ch}$ is the length of the chisel, $h_f$is the thickness of the flat cutter. Therefore, you will get

$$a_r = 30 \text{ cm.}$$

From the justification of the parameters, we have: b_0 = 0.02 ɯ, β = 90°, ρ_1 =70 kN/m², ρ_2= 5 kN/m², d_0= $3b_0$=0.06 m f = 0,4, γ_0=68 °, α=$\alpha_{m.ch}$=34°

After the appropriate calculations, we get R_3=0,46 kN.

To lessen the traction resistance of the chisel, its location angle should be reduced from 34^0 to 9^0 and framework operating height will increase by about 7cm and traction resistance 0,09kN at that.

Thus, based on findings obtained by the theoretical study, the general traction resistance of the layer tillage working unit will be

R= R_1^x + R_2^x + R_3^x = 3.84 + 1.08 + 0.46 = 5,38 kN when $\alpha_{m.ch}$= 34°

R= 2.84 + 1.08 + 0.55 = 4,47 kN when $\alpha_{m.ch}$= 9°

To estimate engineering and operating parameters of the proposed working organ effectively applicable in the layer tillage process, Natioal Agrarian University of Armenia carried out laborator experiments with the result that the traction resistance was 5.06 kN (when $\alpha_{m.ch}$=34°). The deviation from the theoretically obtained value is about 6% (Fig. 4).

Fig. 4 An episode from the laboratory tests of a layered processing worker's organ

Conclusion

1. The traction resistance of the layered processing tool, as determined by theoretical research, is 5.38 kN, of which 3.84 kN is for the chisel, 1.08 kN is for the flat cutter, and 0.46 kN is for the stand. The outcomes of laboratory tests support the aforementioned information. The deviation is less than 6%.
2. The analysis of the traction resistance of the layer processing working member revealed that the most practical method of reduction is thought to be the reduction of the chisel's location angle.

   We can assert that, in the case of the working member of the layered cultivation, we can deviate and reduce the angle of the chisel bit to reduce the drag resistance because the chisel of the working organ of layered cultivation needs to open a crack in the soil layer for the removal of surface water. Additionally, in that scenario, the chiseling rig's angle is maintained according to the main technological requirement $\alpha_{m.ch} < 90 - \varphi$.

   Our recommendation is to move the chisel's location angle from the set 34^0 to 9^0, or almost flat, which will reduce the chisel's traction resistance by 1.0 kN or 26%. It's true that in that situation, the stand's working height will rise by about 7 cm to about 37 cm, increasing its traction resistance by 0.09 kN as a result. This means that by lowering the chisel's location angle to 9^0, the working organ's overall drag resistance will actually decrease by 0.91 kN, or 16.9%.

References

1. Safin Kh.M. Strip-Till Technology in the System of Saving Agriculture: Theory and Practice of Implementation (2013)// Ufa: World of Printing.- 72p.
2. Safin Kh.M. Fakhrislamov R.S., Shvarts L.S., Davletshin F.M., et al Agrotechnical features of the use of Strip-till technology in crop production (recommendations for production) (2017)// Ufa, World of Printing.- 44 p.
3. Gerasimov I.V., Poteshkin K.S. Determination of constructive and regime parameters of the modernized slotter (2012)// Young scientist. Monthly scientific journal №12(47).- p.39-43.

file:///C:/Users/User/AppData/Local/Temp/Temp1_moluch_47.zip/moluch_47_ch1.pdf

4. Goriachkin V.P. Collected works, in 3 vol., vol.2 (1965)// M. KOLOS.- 459p.
5. Bozhko I.V. Calculation of traction resistance of a chisel working body for layer-by-layer non-moldboard tillage (2014)// Scientific journal of KubGAU, No.98(04).- 16p. http://ej.kubagro.ru/2014/04/pdf/98.pdf
6. Mansurov M.T., Rasulov A.D. Theoretical substantiation of the parameters of the leveler-compactor of the combined machine according to the push-pull system for pre-sowing tillage (2016)// Young Scientist No. 8(112).- p.256-258. file:///C:/Users/User/AppData/Local/Temp/Temp1 moluch_112%20(1).zip/moluch_112_ch3.pdf
7. Kantarbaev N.A. Substantiation of the parameters of the combined cultivator for layer-by-layer processing of solonetzes in the conditions of Western Kazakhstan (2016)//Young Scientist.No. 8.2 (112.2).- p.4-9. file:///C:/Users/User/AppData/Local/Temp/Temp1_moluch_112.zip/moluch_112.2.pdf
8. Lenskij A.V., Zheshko A.A., Aletdinova A.A. Construction of mathematical models to determine the traction resistance (2022)// Far Eastern Agrarian Bulletin. Volume 16. No.3.- p.96-106. DOI: 10.22450/199996837-2022-3-96
9. Tolipin V.S., Kislov A.A. Ways to reduce the traction resistance of tillage agricultural machines (2021)// Young Scientist No. 22(364).- p.79-81. file:///C:/Users/User/AppData/Local/Temp/Temp1_moluch_364_rdMixHb.zip/moluch_364c1.pdf
10. Jabborov N.I., Zakharov A.M. Method for determining the energy-technological parameters of soil-cultivating units, taking into account the dynamic resistance of the working bodies (2016) // Young Scientist. No. 15 (119).- p. 241-250. file:///C:/Users/User/AppData/Local/Temp/Temp1-moluch-119-1.zip/moluch-119-ch3.pdf
11. Lenskij A.V., Zheshko A.A., Methods for determining the traction resistance of agricultural machines (2022)// Mechanization and electrification of agriculture. 55.- p.188-198. https://mechel.belal.by/jour/article/view/721/726

References

1. Сафин Х.М. Технология Strip-Till в системе сберегающего земледелия: теория и практика внедрения (2013)// Уфа: Мир печати.- 72с.
2. Сафин Х.М., Фахрисламов Р.С., Шварц Л.С., Давлетшин Ф.М., Мударисов С.Г., Рахимов З.С., Аюпов Д.С., Уметбаев А.Ш. Агротехнические особенности использования Strip-till технологии в растениеводстве (рекомендации производству) (2017)// Уфа, Мир печати.- 44 с.
3. Герасименко И.В., Потешкин К.С. Определение конструктивно-режимных параметров модернизированного щелевателя (2012)// Молодой учёный. Ежемесячный научный журнал №12(47).- с. 39-43. file:///C:/Users/User/AppData/Local/Temp/Temp1_moluch_47.zip/moluch_47_ch1.pdf

4. Горячкин В.П. Собрание сочинений, в3т. Т.2 (1965)//М. КОЛОС.- 459с.
5. Божко И.В. Расчет тягового сопротивления чизельного рабочего органа для послойной безотвальной обработки почвы (2014)//Научный журнал КубГАУ, №98(04).- 16с. http://ej.kubagro.ru/2014/04/pdf/98.pdf
6. Мансуров М.Т., Расулов А.Д. Теоретическое обоснование параметров выравнивателя-уплотнителя комбинированной машины по системе push-pull для предпосевной обработки почвы (2016)// Молодой учёный. №8(112).- с.256-258. file:///C:/Users/User/AppData/Local/Temp/Temp1moluch_112%20(1).zip/moluch_112_ch3.pdf
7. Кантарбаев Н.А. Обоснование параметров комбинированного рыхлителя для послойной обработки солонцов в условиях Западного Казахстана (2016) //Молодой ученый. № 8.2 (112.2).- с. 4-9. file:///C:/Users/User/AppData/Local/Temp/Temp1_moluch_112.zip/moluch_112.2.pdf
8. Ленский А.В., Жешко А.А, Алетдинова А.А. Построение математических моделей для определения тягового сопротивления (2022)//Дальневосточный аграрный вестник. Том 16. №3.- с.96-106. DOI: 10.22450/199996837-2022-3-96.
9. Толыпин В.С., Кислов А.А. Пути снижения тягового сопротивления почвообрабатывающих сельскохозяйственных машин (2021)//Молодой учёный. №22(364).- с.79-81. file:///C:/Users/User/AppData/Local/Temp/Temp1_moluch_364_rdMixHb.zip/moluch_364ch1.pdf
10. Джабборов Н.И., Захаров А.М. Методика определения энерготехнологических параметров почвообрабатывающих агрегатов с учетом террадинамического сопротивления рабочих органов (2016) // Молодой ученый. №15(119).- с.241-250. file:///C:/Users/User/AppData/Local/Temp/Temp1-moluch-119-1.zip/moluch-119-ch3.pdf
11. Ленский А.В., Жешко А.А. Методы определения тягового сопротивления сельскохозяйственных машин (2022)// Механизация и электрификация сельского хозяйства. 55.- с.188-198. https://mechel.belal.by/jour/article/view/721/726

ՀՈՂԻ ՇԵՐՏԱՎՈՐ ՄՇԱԿՄԱՆ ԿՈՄԲԻՆԱՑՎԱԾ ԲԱՆՈՂ ՕՐԳԱՆԻ ՔԱՐՇԱՅԻՆ ԴԻՄԱԴՐՈՒԹՅՈՒՆԸ

Տոնապետյան Պ.Ա.[1,2], Գասպարյան Պ.Յու.[2], Տոնապետյան Ա.Պ.[1], Նիկողոսյան Հ.Հ.[2]
[1] Հայաստանի ազգային ագրարային համալսարան
[2] Շուշիի տեխնոլոգիական համալսարան

Որոշվել է հողի շերտավոր մշակման ագրեգատի կոմբինացված բանող օրգանի քարշային դիմադրությունը, որպես երեք տարրերի՝ կանգնակի, հորատադուրի և հարթահատ թաթիկի ամբողջություն:

Bulletin Of High Technology N1(25) 2023.-pp. 93-103.

P.A. Tonapetyan, P.Yu. Gasparyan, A.P. Tonapetyan, H.H. Nikogosyan

Քարշային դիմադրության տեսականորեն ստացված արդյունքները հիմնավորվել են լաբորատոր փորձերով, կատարվել է համապատասխան վերլուծություն, որի հիման վրա նախանշվել են բանող օրգանի քարշային դիմադրության նվազեցման ուղիները:

Բանալի բառեր. սեպ, հորատադուր, կանգնակ, հարթահատ թաթիկ, ընթացքի խորություն, քարշային դիմադրություն:

ТЯГОВОЕ СОПРОТИВЛЕНИЯ КОМБИНИРОВАННОГО РАБОЧЕГО ОРГАНА ПОСЛОЙНОЙ ОБРАБОТКИ ПОЧВЫ

Тонапетян П.А.[1,2], Гаспарян П.Ю.[2], Тонапетян А.П.[1], Никогосян А.А.[2]
[1] *Национальный аграрный университет Армении*
[2] *Шушинский технологический университет*

Определена сопротивление тяги комбинированного рабочего органа агрегата слоистой обтаботки почвы как целостность трех элементов: стойки, долота и плоскорезной лапы.

Теоретические результаты сопротивления тяги были обоснованы лабороторными экспериментами, проводилось соотвествуюший анализ на основе чего предначертаны способы снижения тягового сопративления рабочего органа.

Ключевые слова: клин, долото, стойка, плоскорезная лапа, глубина хода, тяговое сопротивление.

- Հետազոտությունն իրականացվել է ՀՀ գիտության կոմիտեի ֆինանսական աջակցությամբ՝ 21T - 4B008 ծածկագրով գիտական թեմայի շրջանակներում:

- Исследование выполнено при финансовой поддержке Комитета по науке РА в рамках научного проекта № 21T - 4B008.

- The work was supported by the Science Committee of RA, in the frames of the research project № 21T - 4B008.

Submitted on 02.03.2023
Sent for review on 03.03.2023
Guaranteed for printing on 28.04.2023

AUTHORS

Aleksanyan V.A. - Shushi University of Technology, Doctor of Agricultural Sciences, Associate Professor, +37497231111, artsakhgk@rambler.ru

Arakelyan Sh.A. - Shushi University of Technology, master student, +37497204077, shabo.arakelyan@mail.ru

Farsiyan N.V. - Shushi University of Technology, Candidate of Agricultural Sciences, Associate Professor, +37497265826, nara.nar@mail.ru

Galstyan M.H. - Agricultural Scientific Center of the Ministry of Economy of the Republic of Armenia, Doctor of Agricultural Sciences, Professor, +37477264146, galstyan.merujan@mail.ru

Galstyan S.B. - Shushi University of Technology, Candidate of Agricultural Sciences, Associate Professor, +37497294901, galstyan.saribek@mail.ru

Gasparyan O.N. - National Polytechnic University of Armenia, Doctor of Technical Sciences, Professor, +37493238948, ogasparyan@polytechnic.am

Gasparyan P.Yu. - Vice Rector of Shushi University of Technology, Candidate of Technical Sciences, Associate Professor, +37497252041, pavel64@yandex.ru

Hakobyan G.G. - Republican Speleotherapeutic Center RA, covid.net.tour@gmail.com

Hakobyan R.G. - National Polytechnic University of Armenia, Candidate of Technical Sciences, Associate Professor, +37499618716, rob.hakonyan@polutechnic.am

Harutyunyan A.K. - Shushi University of Technology, +37497555511, aram.harutyunyan.2255@gmail.com

Ispiryan V.H. - National Polytechnic University of Armenia, Lecturer, +37498969989, vaheispiryan4@gmail.com

Jamgharyan T.V. - National Polytechnic University of Armenia, PhD student, +37441345010, t.jamgharyan@yandex.ru

Khachaturyan V.G. - Political, Legal and Economic Researches and Forecasting NGO, Candidate ofn Economics, Senior lecturer, +37491409260, vahagnkhachaturyan7@gmail.com

Markosyan A.Kh. - Political, Legal and Economic Researches and Forecasting NGO, Doctor of Economics, Professor, +37441527635, ashotmarkos@rambler.ru

Markosyan M.A. - Political, Legal and Economic Researches and Forecasting NGO, Candidate of Economics, +37499244233, markosyan844@gmail.com

Matevosyan E.N. - Political, Legal and Economic Researches and Forecasting NGO, Candidate of Economics, +37491512048, eleonora_matevosyan@ysu.am

Melkonyan G.A. - National Polytechnic University of Armenia, Lecturer, +37491366481, goharik-melqonyan@mail.ru

Mikaelyan A.R. - Armenian National Agrarian University, Candidate of Chemical Sciences, Associate Professor, +37441310433, aramrmik@yahoo.com

Mirzoyan M.Sh. - Shushi University of Technology, Assistant, +37497155500, gjasmin2009@mail.ru

Navtalyan I.G. - Shushi University of Technology, master student, +37497537300, inaranavtalyan3@gmail.com

Nersisyan G.H. - Shushi University of Technology, Senior Lecturer, +37497550199, gagik.ners51@gmail.com

Nikogosyan H.H. - Shushi University of Technology, Lecturer, +37497220281, hnikogosyan@gmail.com

Petrosyan V.G. - Shushi University of Technology, master student, +37497291995, nika_33@list.ru

Simonyan T.A. - National Polytechnic University of Armenia**,** master student, +37495757557, simonyantariel07@gmail.com

Titanyan M.K. - Shushi University of Technology, Associate Professor, +37497204285, manush.titan@gmail.com

Tonapetyan A.P. - Armenian National Agrarian University, PhD student, +37498324814, an7_777@bk.ru

Tonapetyan P.A. - Armenian National Agrarian University, Doctor of Technical Sciences, Professor, +37499917181, tonapetyan.pargev@mail.ru

ՀԵՂԻՆԱԿՆԵՐ

Ալեքսանյան Վ.Ա. - Շուշիի տեխնոլոգիական համալսարան, գ.գ.դ., դոցենտ, +37497231111, artsakhgk@rambler.ru

Առաքելյան Շ.Ա. - Շուշիի տեխնոլոգիական համալսարան, մագիստրանտ, +37497204077, shabo.arakelyan@mail.ru

Գալստյան Մ.Հ. - ՀՀ Էկոնոմիկայի նախարարության երկրագործության գիտական կենտրոն, գ.գ.դ, պրոֆեսոր, +37477264146, galstyan.merujan@mail.ru

Գալստյան Ս.Բ. - Շուշիի տեխնոլոգիական համալսարան, գ.գ.թ., դոցենտ, +37497294901, galstyan.saribek@mail.ru

Գասպարյան Պ.Յու. - Շուշիի տեխնոլոգիական համալսարան, տ.գ.թ., դոցենտ, +37497252041, pavel64@yandex.ru

Գասպարյան Օ.Ն. - Հայաստանի ազգային պոլիտեխնիկական համալսարան, տ.գ.դ., պրոֆեսոր, +37493238948, ogasparyan@polytechnic.am

Իսպիրյան Վ.Հ. - Հայաստանի ազգային պոլիտեխնիկական համալսարան, դասախոս, +37498969989, vaheispiryan4@gmail.com

Խաչատուրյան Վ.Գ. - Քաղաքագիտական, իրավագիտական, տնտեսագիտական հետազոտությունների և կանխատեսումների ՀԿ, տ.գ.թ., ավագ դասախոս, +37491409260, vahagnkhachaturyan7@gmail.com

Հակոբյան Գ.Գ. - ՀՀ առողջապահության նախարարության հանրապետական անձավաբուժական, covid.net.tour@gmail.com

Հակոբյան Ռ.Գ. - Հայաստանի ազգային պոլիտեխնիկական համալսարան, տ.գ.թ., դոցենտ, +37499618716, rob.hakonyan@polutechnic.am

Հարությունյան Ա.Կ. - Շուշիի տեխնոլոգիական համալսարան, +37497555511, aram.harutyunyan.2255@gmail.com

Մաթևոսյան Է.Ն. - Քաղաքագիտական, իրավագիտական, տնտեսագիտական հետազոտությունների և կանխատեսումների ՀԿ, տնտ.թ., +37491512048, eleonora_matevosyan@ysu.am

Մարկոսյան Ա.Խ. - Քաղաքագիտական, իրավագիտական, տնտեսագիտական հետազոտությունների և կանխատեսումների ՀԿ, տնտ.դ., պրոֆեսոր, +37441527635, ashotmarkos@rambler.ru

Մարկոսյան Մ.Ա. - Քաղաքագիտական, իրավագիտական, տնտեսագիտական հետազոտությունների և կանխատեսումների ՀԿ, տնտ.թ., +37499244233, markosyan844@gmail.com

Մելքոնյան Գ.Ա. - Հայաստանի ազգային պոլիտեխնիկական համալսարան, դասախոս, +37491366481, goharik-melqonyan@mail.ru

Միրզոյան Մ.Շ. - Շուշիի տեխնոլոգիական համալսարան, ասիստենտ, +37497155500, gjasmin2009@mail.ru

Միքաելյան Ա.Ռ. - Հայաստանի ազգային ագրարային համալսարանի, ք.գ.թ., դոցենտ, +37441310433, aramrmik@yahoo.com

Նավթալյան Ի.Գ. - Շուշիի տեխնոլոգիական համալսարան, մագիստրանտ, +37497537300, inaranavtalyan3@gmail.com

Ներսիսյան Գ.Հ. - Շուշիի տեխնոլոգիական համալսարան, ավագ դասախոս, +37497550199, gagik.ners51@gmail.com

Նիկողոսյան Հ.Հ. - Շուշիի տեխնոլոգիական համալսարան, դասախոս, +37497220281, hnikogosyan@gmail.com

Պետրոսյան Վ.Գ. - Շուշիի տեխնոլոգիական համալսարան, մագիստրանտ, +37497291995, nika_33@list.ru

Ջամղարյան Թ.Վ. - Հայաստանի ազգային պոլիտեխնիկական համալսարան, ասպիրանտ, +37441345010, t.jamgharyan@yandex.ru

Սիմոնյան Տ.Ա. - Հայաստանի ազգային պոլիտեխնիկական համալսարան, մագիստրանտ, +37495757557, simonyantariel07@gmail.com

Տիտանյան Մ.Կ. - Շուշիի տեխնոլոգիական համալսարան, դոցենտ, +37497204285, manush.titan@gmail.com

Տոնապետյան Ա.Պ. - Հայասանի ազգային ագրարային համալսարան, ասպիրանտ, +37498324814, an7_777@bk.ru

Տոնապետյան Պ.Ա. - Հայասանի ազգային ագրարային համալսարան, տ.գ.դ., պրոֆեսոր, +37499917181, tonapetyan.pargev@mail.ru

Ֆարսիյան Ն.Վ. - Շուշիի տեխնոլոգիական համալսարան, գ.գ.թ., դոցենտ, +37497265826, nara.nar@mail.ru

АВТОРЫ

Акопян Г.Г. - Республиканский центр спелеотерапии Армении, covid.net.tour@gmail.com

Акопян Р.Г. - Национальный политехнический университет Армении, кандидат технических наук, доцент, +37499618716, rob.hakonyan@polutechnic.am

Алексанян В.А. - Шушинский технологический университет, доктор сельскохозяйственных наук, доцент, +37497231111, artsakhgk@rambler.ru

Аракелян Ш.А. - Шушинский технологический университет, магистрант, +37497204077, shabo.arakelyan@mail.ru

Арутюнян А.К. - Шушинский технологический университет, +37497555511, aram.harutyunyan.2255@gmail.com

Галстян М.А. - Научный центр земледелия министерства экономики РА, доктор сельскохозяйственных наук, профессор, +37477264146, galstyan.merujan@mail.ru

Галстян С.Б. - Шушинский технологический университет, кандидат сельскохозяйственных наук, доцент, +37497294901, galstyan.saribek@mail.ru

Гаспарян О.Н. - Национальный политехнический университет Армении, доктор технических наук, профессор, +37493238948, ogasparyan@polytechnic.am

Гаспарян П.Ю. - Шушинский технологический университет, кандидат технических наук, доцент, +37497252041, pavel64@yandex.ru

Джамгарян Т.В. - Национальный политехнический университет Армении, аспирант, +37441345010, t.jamgharyan@yandex.ru

Испирян В.Г. - Национальный политехнический университет Армении, преподаватель, +37498969989, vaheispiryan4@gmail.com

Маркосян А.Х. - ОО по политологическим, правовым, экономическим исследованиям и прогнозированию, доктор экономических наук, профессор, +37441527635, ashotmarkos@rambler.ru

Маркосян М.А. - ОО по политологическим, правовым, экономическим исследованиям и прогнозированию, кандидат экономических наук, +37499244233, markosyan844@gmail.com

Матевосян Э.Н. - ОО по политологическим, правовым, экономическим исследованиям и прогнозированию, кандидат экономических наук, +37491512048, eleonora_matevosyan@ysu.am

Мелконян Г.А. - Национальный политехнический университет Армении, преподаватель, +37491366481, goharik-melqonyan@mail.ru

Микаелян А.Р. - Национальный аграрный университет Армении, кандидат химических наук, доцент, +37441310433, aramrmik@yahoo.com

Мирзоян М.Ш. - Шушинский технологический университет, ассистент, +37497155500, gjasmin2009@mail.ru

Навталян И.Г. - Шушинский технологический университет, магистрант, +37497537300, inaranavtalyan3@gmail.com

Нерсисян Г.Г. - Шушинский технологический университет, старший преподаватель, +37497550199, gagik.ners51@gmail.com

Никогосян А.А. - Шушинский технологический университет, преподаватель, +37497220281, hnikogosyan@gmail.com

Петросян В.Г. - Шушинский технологический университет, магистрант, +37497291995, nika_33@list.ru

Симонян Т.А. - Национальный политехнический университет Армении, магистрант, +37495757557, simonyantariel07@gmail.com

Титанян М.К. - Шушинский технологический университет, доцент, +37497204285, manush.titan@gmail.com

Тонапетян А.П. - Национальный аграрный университет Армении, аспирант, +37498324814, an7_777@bk.ru

Тонапетян П.А. - Национальный аграрный университет Армении, доктор технических наук, профессор, +37499917181, tonapetyan.pargev@mail.ru

Фарсиян Н.В. - Шушинский технологический университет, кандидат сельскохозяйственных наук, доцент, +37497265826, nara.nar@mail.ru

Хачатурян В.Г. - ОО по политологическим, правовым, экономическим исследованиям и прогнозированию, кандидат экономических наук, старший преподаватель, +37491409260, vahagnkhachaturyan7@gmail.com

THE ARTICLE COPYRIGHT SUBMISSION FORMAT REQUIREMENTS

1. Sheet format A4, margins up, down, left, right 18 mm.
2. Articles should be submitted in English, the font is Times New Roman, abstracts- Armenian- Unicode /GHEA Grapalat/, Russian -Times New Roman, English – Times New Roman. Line spacing – 1,15.
3. The title of the article is given in 11 capital letters **Bold** p.t. on the right top of the page. They are entitled in the sections of **AGRICULTURE, ARCHITECTURE AND CONSTRUCTION, ECONOMICS, INFORMATION AND COMMUNICATION TECHNOLOGIES, MACHINE INDUSTRY AND LOGISTICS, NATURAL SCIENCES, WATER SYSTEMS** for the bulletin.
4. There is UDC with no less than six numbers in 11 p.t. on the left part of the page one line down the section.
5. The title is given in capital letters 14 **Bold** p.t. a line down in the middle.
6. The author's name and, if desired, the initials of second name and full surname are given in 11 **Bold** p.t. two lines down from the right.
7. The name of the organization (organizations) is given in 11 p.t. a line down from the right.
8. The address of the organization is given in 11 p.t. a line down from the right.
9. In case of the article being submitted by two organiztions 7 and 8 points are repeated from the next line.
10. The electronic mail of the author is written in 11 p.t. a line down from the right.
11. The author's ORCID number is written in 11 p.t. a line down from the right.
12. The name of the country of the author's citizenship is written in 11 p.t a line down from the right.
13. The information about other authors is written in the same order two lines down.
14. The abstract (**Abstract**) of the article is written in 12 p.t. two lines down. **Abstract** is written in 12 p.t. **bold.**
15. **Key words** are given in 12 p.t. two lines down. ***Key words*** are written in Italic (*Italic*) in 12 **bold** p.t.
16. The main text of the article is given in 12 p.t. two lines down which should obligatorily have the following sections: **Introduction**, **Conflict setting**, **Research results**, **Conclusion**: The article may also include other sections, in particular **Materials and methods, Experimental procedures, Discussion** and others. The names of the sections are written in 12 **bold** 10 mm Tab. The text of the section is given in 12 p.t. 10 mm Tab. Each section is given two lines down from the previous.
17. Formulas are given in **Math Type** program in the middle and are enumerated in brackets to the right.
18. Pictures, diagrams and tables may be used in texts. The pictures and diagrams are numbered by transit numbering pointed as "**Pic**.". They can be placed in the middle in 11 **Bold** p.t. down the pictures (diagrams) having **Pic.** in front and the ordinal number of the picture (diagram). Down the title corresponding explanations can be given in 10 p.t. in the middle. Tables are numbered by transit numbering pointed as **Table.** The names and descriptions of tables and symbols are given above them in 11 **bold p.t.** in the middle and

Table and its serial number are written in 11 **bold p.t.** from the right. The notes are written in 10 p.t. inside the table (if necessary, they can be given in 9 p.t.).

19. In the end of the article "**References**" is given two lines down numbered according to the link order. The sources must be marked […]. The links include the surname and the first letter (letters) of the name and second name of author (authors), full title of the article, publishing data of the article (in brackets). Then the sign // is given and the name of the edition, town, edition number and pages are given. In the case of books and monographs the total number of pages is given. The sources are given in original and in English translations (two lists of references are given except the cases when all the links are on the materials published in English).
20. The abstracts are given in Armenian and Russian (Резюме) on separate pages. The translation of abstracts of the articles from abroad is done by the editorials of the bulletin if necessary. The Armenian version of the abstract is given in 11 p.t. and the Russian version is given in 12 p.t. Key words are added to the abstract in presented language.
21. Information about author (authors) (post, telephone number, scientific degree, scientific title, electronic mail) should be given on separate page.
22. The articles should be sent to **info@bulletin.am.**
23. Besides the English version, the author presents also the Armenian or Russian version of the article (except the articles from the abroad). The initials of name and second name and surname (surnames) of the author (authors) are given in the abstract after the title of the article.
24. The articles are checked through plagiarism.
25. The author is responsible for publishing the confidential information.
26. The article is recommended to be published by editorial board according to the opinion of reviewer or member of editorial board. The review should obligatorily include conclusion on scientific novelty.
27. The articles with negative review are not published.

ՀՈԴՎԱԾԻ ՁԵՎԱԿԵՐՊՄԱՆ ՊԱՀԱՆՋՆԵՐ

1. Էջի ֆորմատը՝ A4, լուսանցքները՝ 18 մմ (աջ, ձախ, վերև, ներքև):
2. Հոդվածի լեզուն՝ անգլերեն, տառատեսակը՝ Times New Roman, ամփոփագրերը՝ հայերեն (Unicode/GHEA Grapalat), ռուսերեն (Times New Roman): Միջտողային հեռավորությունը՝ 1,15:
3. Էջի վերին աջ անկյունում, գլխատառերով, 11 **bold** տառաչափով գրվում է խորագիրը: Տեղեկագրի համար դրանք են՝ **AGRICULTURE, ARCHITECTURE AND CONSTRUCTION, ECONOMICS, INFORMATION AND COMMUNICATION TECHNOLOGIES, MACHINE INDUSTRY AND LOGISTICS, NATURAL SCIENCES, WATER SYSTEMS**.
4. Հաջորդ տողի ձախ անկյունում գրվում է ՀՏԴ-ն (UDC)՝ առնվազն վեց նիշ՝ 11 տառաչափով:
5. Հաջորդ տողի մեջտեղում գլխատառերով գրվում է հոդվածի վերնագիրը՝ 14 **bold** տառաչափով:
6. Երկու տող ներքև, աջից, 11 **bold** տառաչափով գրվում է հեղինակի Անունը, ցանկության դեպքում՝ Հայրանվան առաջին տառը, Ազգանունը:
7. Հաջորդ տողում՝ աջից, 11 տառաչափով գրվում է կազմակերպության անվանումը:
8. Հաջորդ տողում՝ աջից, 11 տառաչափով գրվում է կազմակերպության հասցեն:
9. Երկու կազմակերպության կողմից հոդվածը ներկայացված լինելու դեպքում, 7-րդ և 8-րդ կետերը, հաջորդ տողից, կրկնվում են:
10. Հաջորդ տողում՝ աջից, 11 տառաչափով գրվում է հեղինակի էլեկտրոնային հասցեն:
11. Հաջորդ տողում՝ աջից, 11 տառաչափով գրվում է հեղինակի ORCID -ը:
12. Հաջորդ տողում՝ աջից, 11 տառաչափով գրվում է այն պետության անվանումը, որի քաղաքացին է հեղինակը:
13. Երկու տող ներքև, առկայության պարագայում, նույն կարգով, գրվում է մյուս հեղինակների տվյալները:
14. Երկու տող ներքև, 12 տառաչափով գրվում է հոդվածի ամփոփագիրը (**Abstract**): «**Abstract»** բառը գրվում է 12 **bold** տառաչափով:
15. Երկու տող ներքև, 12 տառաչափով գրվում է բանալի բառերը (***Key words***): «***Key words***» բառերը գրվում են շեղատառով (*Italic*)՝ 12 **bold** տառաչափով:
16. Երկու տող ներքև, 12 տառաչափով գրվում է հոդվածի տեքստը, որը պարտադիր պետք է ունենա հետևյալ բաժինները՝ **Introduction**, **Conflict setting**, **Research results**, **Conclusion**: Հոդվածը կարող է ներառել նաև այլ բաժիններ, մասնավորապես՝ **Materials and methods, Experimental procedures, Discussion**, այլ: Բաժինների անվանումները գրվում են 12 **bold** տառաչափով՝ 10 մմ խորքից: Հաջորդ տողից, 10 մմ խորքից, 12 տառաչափով գրվում է բաժնի տեքստը: Յուրաքանչյուր բաժին սկսվում է գրվել նախորդից երկու տող ներքև:
17. Բանաձևերը ներկայացվում են **Math Type** ծրագրով, առանձին տողով, մեջտեղում և համարակալվում են աջ մասում՝ փակագծերի մեջ:

18. Տեքստում կարող են լինել նկարներ, գծապատկերներ, աղյուսակներ: Նկարները և գծապատկերները համարակալվում են «Նկ.» նմուշառմամբ: Դրանց անվանումները գրվում են 11 **bold** տառաչափով՝ մեջտեղում՝ նկարների (գծապատկերների) ներքևում՝ առջևից նշելով «**Նկ.** և նկարի (գծապատկերի) հերթական համարը»: Անվանման տակ՝ մեջտեղում՝ 10 տառաչափով կարող են գրվել համապատասխան բացատրություններ: Աղյուսակները համարակալվում են «աղ.» նմուշառմամբ: Դրանց անվանումները գրվում են 11 **bold** տառաչափով՝ մեջտեղից՝ աղյուսակի վերևում, իսկ անվանման վերևում՝ աջից, 11 **bold** տառաչափով, գրվում է «**Աղյուսակ** և աղյուսակի հերթական համարը»: Աղյուսակի մեջ գրառումներն իրականացվում են 10 տառաչափով (անհրաժեշտության դեպքում՝ 9 տառաչափով):
19. Հոդվածի վերջում, երկու տող ներքև, ներկայացվում է օգտագործված գրականության ցանկը (**References**)՝ համարակալված ըստ հղումների հերթականության: Աղբյուրները բերվում են [..] նմուշառմամբ: Հոդվածների վրա հղումները ներառում են հեղինակ/ներ/ի Ազգանունը, Անվան, Հայրանվան սկզբնատառերը, հոդվածի անվանումը, փակագծերի մեջ հոդվածի հրատարակման տարին: Այնուհետ դրվում է «//» նշանը և գրվում է հանդեսի անվանումը, քաղաքը, հրատարակման համարը, էջերը: Իսկ գրքերի, մենագրությունների դեպքում՝ էջերի ընդհանուր քանակը: Աղբյուրները ներկայացվում են բնօրինակ և անգլերեն թարգմանված տարբերակներով (ներկայացվում է գրականության 2 ցանկ՝ բացառությամբ այն դեպքի, երբ բոլոր հղումները անգլերեն լեզվով հրատարակված նյութերի վրա են):
20. Առանձին էջի վրա տրվում են հոդվածի ամփոփագրերը հայերեն և ռուսերեն լեզուներով: Արտերկրից ներկայացվող հոդվածների ամփոփագրերի թարգմանությունը, անհրաժեշտության դեպքում, իրականացնում է տեղեկագրի խմբագրությունը: Ամփոփագրի հայերեն տարբերակը ներկայացվում է 11, իսկ ռուսերեն տարբերակը՝ 12 տառաչափով: Ամփոփագրին, ներկայացվող լեզվով կցվում են բանալի բառերը:
21. Առանձին էջի վրա բերվում են հեղինակ/ներ/ի մասին տվյալները (պաշտոն, հեռախոս, գիտական աստիճան, գիտական կոչում, էլ. հասցե):
22. Հոդվածները ներկայացվում են info@bulletin.am հասցեով:
23. Անգլերեն տարբերակից բացի, հեղինակը ներկայացնում է նաև հոդվածի հայերեն կամ ռուսերեն տարբերակը (բացառությամբ արտերկրից ներկայացվող հոդվածների): Ամփոփոգրում, վերնագրից հետո բերվում են հեղինակ/ներ/ի Անվան, Հայրանվան սկզբնատառերը և Ազգանուն/ներ/ը:
24. Հոդվածները ստուգվում են գրագողության դեմ:
25. Հեղինակը կրում է գաղտնի տեղեկատվություն հրապարակելու ողջ պատասխանատվությունը:
26. Հոդվածները տպագրության են երաշխավորվում խմբագրական խորհրդի կողմից՝ խմբագրական խորհրդի անդամի երաշխավորությամբ կամ գրախոսման կարծիքի հիման վրա: Կարծիքը պետք է պարունակի եզրակացություն գիտական նորույթի վերաբերյալ:
27. Բացասական եզրակացություն ստացած հոդվածները տեղեկագրում հրատարակման ենթակա չեն:

Утверждено решением Координационного совета журнала ИВТ от 19.07.2021.

ТРЕБОВАНИЯ К ОФОРМЛЕНИЮ СТАТЬИ

1. Формат страницы - А4, поля - 18 мм (справа, слева, сверху, снизу).
2. Язык статьи - английский, шрифт: **Times New Roman**, аннотации: армянский - (**Unicode/GHEA Grapalat**), русский - (**Times New Roman**). Междустрочный интервал - 1,15.
3. В правом верхнем углу страницы, заглавными буквами, шрифтом 11 **bold** пишется рубрика. Для Известий это**: AGRICULTURE, ARCHITECTURE AND CONSTRUCTION, ECONOMICS, INFORMATION AND COMMUNICATION TECHNOLOGIES, MACHINE INDUSTRY AND LOGISTICS, NATURAL SCIENCES, WATER SYSTEMS.**
4. В левом углу следующей строки проставляется индекс УДК (минимум шестизначное число), размер шрифта 11.
5. В середине следующей строки заглавными буквами пишется название статьи, размер шрифта - 14 **bold**.
6. Две строки ниже, справа, шрифтом 11 **bold** пишутся инициалы Имени (при желании - Отчества) и Фамилия автора.
7. На следующей строке, справа, пишется название организации, размер шрифта - 11.
8. На следующей строке, справа, пишется адрес организации, размер шрифта - 11.
9. В случае представления статьи двумя организациями, пункты 7 и 8 повторяются со следующей строки.
10. На следующей строке, справа, пишется адрес электронной почты автора, размер шрифта - 11.
11. На следующей строке, справа, пишется ORCID автора, размер шрифта - 11.
12. На следующей строке, справа пишется название государства, гражданином которого является автор, размер шрифта - 11.
13. Две строки ниже, в том же порядке, пишутся данные других авторов, если они есть.
14. Две строки ниже, пишется аннотация статьи (**Abstract**), размер шрифта - 12. Слово **Abstract** пишется шрифтом 12 **bold**.
15. Две строки ниже, с размером шрифта 12 пишутся ключевые слова (***Key words)***. Слова «***Key words*»** пишутся курсивом (*Italic*), размер шрифта - 12 **bold**.
16. Две строки ниже, с размером шрифта 12, пишется текст статьи, который обязательно должен иметь следующие разделы: **Introduction**, **Conflict setting**, **Research results**, **Conclusion**. Статья может включать и другие разделы, в частности, **Materials and methods, Experimental procedures, Discussion** и т.д. Названия разделов пишутся шрифтом 12 **bold** с отступом 10 мм. Со следующей строки, с отступом 10 мм пишется текст раздела, размер шрифта - 12. Каждый раздел начинается двумя строками ниже предыдущего.
17. Формулы представляются по программе **MathType**, отдельной строкой, посередине и пронумеровываются в правой части, в скобках.
18. В тексте могут быть рисунки, графики и таблицы. Рисунки и графики нумеруются сквозной нумерацией по образцу - "Рис." Их названия пишутся шрифтом 11 **bold** посередине, внизу рисунков (графиков), с указанием спереди **Рис.** и порядкового номера рисунка (графика). Под названием, посередине, могут быть написаны

соответствующие объяснения, размер шрифта - 10. Таблицы нумеруются сквозной нумерацией по образцу - "Таб.". Их названия пишутся шрифтом 11 **bold**, посередине - над таблицей, а над названием - справа, шрифтом 11 **bold** пишется "**Таблица** и порядковый номер таблицы". Записи в таблице производятся размером шрифта 10, (при необходимости - размер шрифта 9).

19. В конце статьи, две строки ниже представляется список использованной литературы (**References**), пронумерованный по последовательности ссылок. Источники приводятся по образцу [..]. Ссылки на статьи включают Фамилию, инициалы Имени и Отчества автора (-ов), название статьи, год издания статьи в скобках. Затем ставится знак "//" и пишется название журнала, город, номер издания, страницы. А в случае книг и монографий - общее количество страниц. Источники представляются в оригинальной версии и в переводе на английский язык (представляются два списка литературы, за исключением случаев, когда все ссылки делаются на материалы, опубликованные на английском языке).
20. На отдельной странице приводятся аннотации статьи на армянском и русском языках. Перевод аннотаций статей, представляемых из-за рубежа, при необходимости осуществляет редакция журнала. Армянский вариант аннотации представляется 11 шрифтом, русский - 12 шрифтом. К аннотации прилагаются ключевые слова на том же языке.
21. На отдельной странице приводятся данные об авторе (-ах): должность, телефон, ученая степень, ученое звание, адрес электронной почты.
22. Статьи представляются по адресу info@bulletin.am.
23. Помимо английской версии, автор также представляет армянский или русский вариант статьи (за исключением статей из-за рубежа). В аннотации после названия статьи приводятся инициалы Имени автора (-ов), Отчества и Фамилия (-ии).
24. Статьи проверяются на плагиат.
25. Автор несет полную ответственность за публикацию конфиденциальной информации.
26. Статья рекомендуется к публикации редакционным советом по рекомендации члена редакционного совета или на основании его рецензии. Рецензия должна содержать заключение о научной новизне.
27. Статьи, получившие отрицательное заключение, не подлежат публикации в журнале.

CONTENTS

ԲՈՎԱՆԴԱԿՈՒԹՅՈՒՆ

СОДЕРЖАНИЕ